NDDOT ABBREVIATIONS

D-101-1

?	This is a special text character used in the labeling of existing features. It indicates a feature that has an unknown characteristic, potentially based on: lack of description, location accuracy or purpose.
Abn	abandoned
Abut	abutment
Ac	acres
Adj	adjusted
Aggr	aggregate
Ahd	ahead
ARV	air release valve
Align	alignment
Al	alley
Alt	alternate
Alum	aluminum
ADA	Americans with Disabilities Act
A	ampere
&	and
Appr	approach
Approx	approximate
ACP	asbestos cement pipe
Asph	asphalt
AC	asphalt cement
Assmd	assumed
@	at
Atten	attenuation
ATR	automatic traffic recorder
Ave	Avenue
Avg	average
ADT	average daily traffic
Az	azimuth
Bk	back
BF	back face
Bs	backsight
Balc	balcony
B Wire	barbed wire
Barr	barricade
Btry	battery
Brg	bearing
BI	beehive inlet
Beg	begin
BM	bench mark
Bkwy	bikeway
Bit	bituminous
Blk	block
Bd Ft	board feet
BH	bore hole
BS	both sides
Bot	bottom
Blvd	Boulevard
Bndry	boundary
BC	brass cap
Brkwy	breakaway
Br	bridge
Bldg	building
BV	butterfly valve
Byp	bypass
C Gdrl	cable guardrail
Calc	calculate
Cd	candela
CIP	cast iron pipe
CB	catch basin
CRS	cationic rapid setting
C Gd	cattle guard
C To C	center to center
Cl or ℄	centerline
Cm	centimeter
Ch	chain
Chnlk	chain-link
Ch Blk	channel block
Ch Ch	channel change
Chk	check
Chsld	chiseled
Cir	circle
Cl	class
Cl	clay
Cl F	clay fill
Cl Hvy	clay heavy
Cl Lm	clay loam
Clnt	clean-out
Clr	clear
Cl&gr	clearing & grubbing
Co S	coal slack
C Gr	coarse gravel
CS	coarse sand
Comb.	combination
Coml	commercial
Compr	compression
CADD	computer aided drafting & design
Conc	concrete
CECB	concrete erosion control blanket
Cond	conductor
Const	construction
Cont	continuous
CSB	continuous split barrel sample
Contr	contraction
Contr	contractor
CP	control point
Coord	coordinate
Cor	corner
Corr	corrected
CAES	corrugated aluminum end section
CAP	corrugated aluminum pipe
CMES	corrugated metal end section
CMP	corrugated metal pipe
CPVCP	corrugated poly-vinyl chloride pipe
CSES	corrugated steel end section
CSFES	corrugated steel flared end section
CSP	corrugated steel pipe
CSTES	corrugated steel traversable end section
C	coulomb
Co	County
Crse	course
Ct	Court
Xarm	cross arm
Xbuck	cross buck
Xsec	cross sections
Xing	crossing
Xrd	Crossroad
Crn	crown
CF	cubic feet
M3	cubic meter
M3/s	cubic meters per second
CY	cubic yard
Cy/mi	cubic yards per mile
Culv	culvert
C&G	curb & gutter
CI	curb inlet
CR	curb ramp
CS	curve to spiral
C	cut
Dd Ld	dead load
Defl	deflection
Defm	deformed
Deg or D	degree
Dlnt	delineate
Dlntr	delineator
Depr	depression
Desc	description
Det	detail
DWP	detectable warning panel
Dtr	detour
Dia or ø	diameter
Dir	direction
Dist	distance
DM	disturbed material
DB	ditch block
DG	ditch grade
Dbl	double
Dn	down
Dwg	drawing
Dr	drive
Drwy	driveway
DI	drop inlet
D	dry density
Ea	each
Esmt	easement
E	East
EB	Eastbound
Elast	elastomeric
EL	electric locker
E Mtr	electric meter
Elec	electric/al
EDM	electronic distance meter
Elev or El	elevation
Ellipt	elliptical
Emb	embankment
Emuls	emulsion/emulsified
ES	end section
Engr	engineer
ESS	environmental sensor station
Eq	equal
Eq	equation
Evgr	evergreen
Exc	excavation
Exst	existing
Exp	expansion
Expy	Expressway
E	external of curve
Extru	extruded
FOS	factor of safety
F	Fahrenheit
FS	far side
F	farad
Fed	Federal
FP	feed point
Ft	feet/foot
Fn	fence
Fn P	fence post
FO	fiber optic
FB	field book
FD	field drive
F	fill
FAA	fine aggregate angularity
FS	fine sand
FH	fire hydrant
Fl	flange
Flrd	flared
FES	flared end section
F Bcn	flashing beacon
FA	flight auger sample
FL	flow line
Ftg	footing
FM	force main
Fs	foresight

NORTH DAKOTA DEPARTMENT OF TRANSPORTATION	
07-01-14	
REVISIONS	
DATE	CHANGE
04-23-18	General Revisions

This document was originally issued and sealed by Roger Weigel, Registration Number PE- 2930, on 04/23/18 and the original document is stored at the North Dakota Department of Transportation

NDDOT ABBREVIATIONS

D-101-2

Fnd	found
Fdn	foundation
Frac	fractional
Frwy	freeway
Frt	front
FF	front face
F Disp	fuel dispenser
FFP	fuel filler pipes
FLS	fuel leak sensor
Furn	furnish/ed
Gal	gallon
Galv	galvanized
Gar	garage
Gs L	gas line
G Reg	gas line regulator
GMV	gas main valve
G Mtr	gas meter
GSV	gas service valve
GVP	gas vent pipe
GV	gate valve
Ga	gauge
Geod	geodetic
GIS	Geographical Information System
G	giga
GPS	Global Positioning System
Gov	government
Grd	graded/grade
Gr	gravel
Grnd	ground
GWM	ground water monitor
Gdrl	guardrail
Gtr	gutter
H Plg	H piling
Hdwl	headwall
Ha	hectare
Ht	height
HI	height of instrument
Hel	helical
H	henry
Hz	hertz
HDPE	high density polyethylene
HM	high mast
HP	high pressure
HPS	high pressure sodium
Hwy	highway
Hor	horizontal
HBP	hot bituminous pavement
HMA	hot mix asphalt
Hr	hour(s)
Hyd	hydrant
Ph	hydrogen ion content
Id	identification
In or "	inch
Incl	inclinometer tube
IMH	inlet manhole
ID	inside diameter
Inst	instrument
Intchg	interchange
Intmdt	intermediate
Intscn	intersection
Inv	invert
IM	iron monument
I Pn	Iron Pin
IP	iron Pipe
Jt	joint
J	joule
Jct	junction
K	kelvin
Kn	kilo newton
Kpa	kilo pascal
Kg	kilogram
Kg/m3	kilogram per cubic meter
Km	kilometer
K	Kip(s)
LS	Land Surveyor (licensed)
LSIT	Land Surveyor In Training
Ln	lane
Lg	large
Lat	latitude
Lt	left
L	length of curve
Lens	lenses
Lvl	level
LB	level book
Lvlng	leveling
Lht	light
LP	light pole
Ltg	lighting
Lig Co	lignite coal
Lig Sl	lignite slack
LF	linear foot
Liq	liquid
LL	liquid limit
L	litre
Lm	loam
Loc	location
LC	long chord
Long.	longitude
Lp	loop
LD	loop detector
Lm	lumen
Lum	luminaire
L Sum	lump sum
Lx	lux
Mb	mailbox
ML	main line
M Hr	man hour
MH	manhole
Mkd	marked
Mkr	marker
Mkg	marking
MA	mast arm
Matl	material
Max	maximum
MC	meander corner
Meas	measure
Mdn	median
MD	median drain
MC	medium curing
M	mega
Mer	meridian
M	meter
M/s	meters per second
M	mid ordinate of curve
MGS	Midwest Guardrail System
Mi	mile
MM	mile marker
MP	mile post
Ml	milliliter
Mm	millimeter
Mm/hr	millimeters per hour
Min	minimum
Misc	miscellaneous
Mon	monument
Mnd	mound
Mtbl	mountable
Mtd	mounted
Mtg	mounting
Mk	muck
Mun	municipal
N	nano
NGS	National Geodetic Survey
NS	near side
Neop	neoprene
Ntwk	network
N	newton
N	North
NE	North East
NW	North West
NB	Northbound
No. or #	number
Obsc	obscure(d)
Obsn	observation
Ocpd	occupied
Ocpy	occupy
Off Loc	office location
O/s	offset
OC	on center
C	one dimensional consolidation
OC	organic content
Orig	original
O To O	out to out
OD	outside diameter
OH	overhead
PMT	pad mounted transformer
Pg	pages
Pntd	painted
Pr	pair
Pnl	panel
Pk	park
PK	Parker-Kalon nail
Pa	pascal
PSD	passing sight distance
Pvmt	pavement
Ped	pedestal
Ped	pedestrian
PPP	pedestrian pushbutton post
Pen.	penetration
Perf	perforated
Per.	perimeter
PL	pipeline
Pl	place
P&P	plan & profile
PL	plastic limit
P Cap	plastic cap
Pl or ℙ	plate
Pt	point
PCC	point of compound curve
PC	point of curve
PI	point of intersection
PRC	point of reverse curvature
PT	point of tangent
POC	point on curve
POT	point on tangent
PE	polyethylene
PVC	polyvinyl chloride
PCC	Portland Cement concrete
Lb or #	pounds
PP	power pole
Preempt	preemption
Prefab	prefabricated
Prfmd or Pref	preformed
Prep	preperation
Press.	pressure

NORTH DAKOTA DEPARTMENT OF TRANSPORTATION	
07-01-14	
REVISIONS	
DATE	CHANGE
08-03-15	General Revisions
04-23-18	General Revisions

This document was originally issued and sealed by Roger Weigel, Registration Number PE- 2930, on 04/23/18 and the original document is stored at the North Dakota Department of Transportation

NDDOT ABBREVIATIONS

D-101-3

PRV	pressure relief valve
Prestr	prestressed
Pvt	private
PD	private drive
Prod.	production/produce
Prog	programmed
Prop.	property
Prop Ln	property line
Ppsd	proposed
PB	pull box
Qty	quantity
Qtr	quarter
Rad or R	radius
RR	railroad
Rlwy	railway
Rsd	raised
RTP	random traverse point
Rge or R	range
RC	rapid curing
Rec	record
Rcy	recycle
RAP	recycled asphalt pavement
RPCC	recycled portland cement concrete
Ref	reference
R Mkr	reference marker
RM	reference monument
RP	reference point
Refl	reflectorized
RCB	reinforced concrete box
RCES	reinforced concrete end section
RCFES	reinforced concrete flared end section
RCTES	reinforced concrete traversable end section
RCP	reinforced concrete pipe
RCPS	reinforced concrete pipe sewer
Reinf	reinforcement
Res	reservation
Rs	residence
Ret	retaining
Rev	reverse
Rt	right
R/W	right of way
Riv	river
Rd	road
Rdbd	road bed
Rdwy	roadway
RWIS	roadway weather information system
Rk	rock
Rt	route
Salv	salvage(d)
Sd	sand
Sdy Cl	sandy clay
Sdy Cl Lm	sandy clay loam
Sdy Fl	sandy fill
Sdy Lm	sandy loam
San	sanitary sewer line
Sc	scoria
Sec	seconds
Sec	section
SL	section line
Sep	separation
Seq	sequence
Serv	service
Sh	shale
Sht	sheet
Shtng	sheeting
Shldr	shoulder
Sw or Sdwk	sidewalk
S	siemens
SD	sight distance
SN	sign number
Sig	signal
Si Cl	silt clay
Si Cl Lm	silty clay loam
Si Lm	silty loam
Sgl	single
SRCP	slotted reinforced concrete pipe
SC	slow curing
SS	slow setting
Sm	small
S	South
SE	South East
SW	South West
SB	Southbound
Sp	spaces
Spcl	special
SA	special assembly
SP	special provisions
G	specific gravity
Spk	spike
SC	spiral to curve
ST	spiral to tangent
SB	split barrel sample
SH	sprinkler head
SV	sprinkler valve
Sq	square
SF	square feet
Km2	square kilometer
M2	square meter
SY	square yard
Stk	stake
Std	standard
N	standard penetration test
Std Specs	standard specifications
Sta	station
Sta Yd	station yards
Stm L	steam line
SEC	steel encased concrete
SMA	stone matrix asphalt
SSD	stopping sight distance
SD	storm drain
St	street
SPP	structural plate pipe
SPPA	structural plate pipe arch
Str	structure
Subd	subdivision
Sub	subgrade
Sub Prep	subgrade preperation
Ss	subsoil
SE	superelevation
SS	supplement specification
Supp	supplemental
Surf	surfacing
Surv	survey
Sym	symmetrical
SI	systems international
Tan	tangent
T	tangent (semi)
TS	tangent to spiral
Tel	telephone
Tel B	Telephone Booth
Tel P	telephone pole
Tv	television
Temp	temperature
Temp	temporary
TBM	temporary bench mark
T	tesla
T	thinwall tube sample
T/mi	tons per mile
Ts	topsoil
Twp or T	township
Traf	traffic
TSCB	traffic signal control box
Tr	trail
Transf	transformer
TB	transit book
Trans	transition
TT	transmission tower
TES	traversable end section
Trans	transverse
Trav	traverse
TP	traverse point
Trtd	treated
Trmt	treatment
Qc	triaxial compression
TERO	tribal employment rights ordinance
Tpl	triple
TP	turning point
Typ	typical
Qu	unconfined compressive strength
Ugrnd	underground
USC&G	US Coast & Geodetic Survey
USGS	US Geologic Survey
Util	utility
VG	valley gutter
Vap	vapor
Vert	vertical
VC	vertical curve
VCP	vitrified clay pipe
V	volt
Vol	volume
Wkwy	walkway
W	water content
WGV	water gate valve
WL	water line
WM	water main
WMV	water main valve
W Mtr	water meter
WSV	water service valve
WW	water well
W	watt
Wrng	wearing
Wb	weber
WIM	weigh in motion
W	west
WB	westbound
Wrng	wiring
W/	with
W/o	without
WC	witness corner
WGS	world geodetic system
Z	zenith

NORTH DAKOTA
DEPARTMENT OF TRANSPORTATION

07-01-14

REVISIONS

DATE	CHANGE
08-03-15	General Revisions
04-23-18	General Revisions

This document was originally issued and sealed by Roger Weigel, Registration Number PE- 2930, on 04/23/18 and the original document is stored at the North Dakota Department of Transportation

NDDOT UTILITY COMPANY AND ORGANIZATION ABBREVIATIONS

D-101-10

702COM	702 Communications
ACCENT	Accent Communications
AGASSIZ WU	Agassiz Water Users Incorporated
AGC	Assiociated General Contractors of America
All PI	Alliance Pipeline
ALL SEAS WU	All Seasons Water Users Association
AMOCO PI	Amoco Pipeline Company
AMRDA HESS	Amerada Hess Corporation
AT&T	AT&T Corporation
B PAW	Bear Paw Energy Incorporated
BAKER ELEC	Baker Electric
BASIN ELEC	Basin Electric Cooperative Incorporated
BEK TEL	Bek Communications Cooperative
BELLE PL	Belle Fourche Pipeline Company
BLM	Bureau of Land Management
BNSF	Burlington Northern Santa Fe Railway
BOEING	Boeing
BRNS RWD	Barnes Rural Water District
BURK-DIV ELEC	Burke-Divide Electric Cooperative
BURL WU	Burleigh Water Users
Cable One	Cable One
CABLE SERV	Cable Services
CAP ELEC	Capital Electric Cooperative Incorporat
CASS CO ELEC	Cass County Electric Cooperative
CASS RWU	Cass Rural Water Users Incorporated
CAV ELEC	Cavalier Rural Electric Cooperative
CBLCOM	Cablecom Of Fargo
CENEX PL	Cenex Pipeline
CENT PL WATER DIST	Central Pipe Line Water District
CENT PWR ELEC	Central Power Electric Cooperative
COE	Corps of Engineers
CONS TEL	Consolidated Telephone
CONT RES	Continental Resource Inc
CPR	Canadian Pacific Railway
D O E	Department Of Energy
DAK CARR	Dakota Carrier Network
DAK CENT TEL	Dakota Central Telephone
DAK RWD	Dakota Rural Water District
DGC	Dakota Gasification Company
DICKEY R NET	Dickey Rural Networks
DICKEY RWU	Dickey Rural Water Users Association
DICKEY TEL	Dickey Telephone
DNRR	Dakota Northern Railroad
DOME PL	Dome Pipeline Company
DVELEC	Dakota Valley Electric Cooperative
DVMW	Dakota, Missouri Valley & Western
ENBRDG	Enbridge Pipelines Incorporated
ENVENTIS	Enventis Telephone
FALK MNG	Falkirk Mining Company
FHWA	Federal Highway Administration
G FKS-TRL WD	Grand Forks-traill Water District
GETTY TRD & TRAN	Getty Trading & Transportation
GLDN W ELEC	Golden West Electric Cooperative
GRGS CO TEL	Griggs County Telephone
GT PLNS NAT GAS	Great Plains Natural Gas Company
HALS TEL	Halstad Telephone Company
IDEA1	Idea1
INT-COMM TEL	Inter-Community Telephone Company
KANEB PL	Kaneb Pipeline Company
KEM ELEC	Kem Electric Cooperative Incorporated
KOCH GATH SYS	Koch Gathering Systems Incorporated
LKHD PL	Lakehead Pipeline Company
LNGDN RWU	Langdon Rural Water Users Incorporated
LWR YELL R ELEC	Lower Yellowstone Rural Electric
MCKNZ CON	McKenzie Consolidated Telcom
MCKNZ ELEC	McKenzie Electric Cooperative
MCKNZ WRD	McKenzie County Water Resource District
MCLEOD	McLeod USA
MCLN ELEC	McLean Electric Cooperative
MCLN-SHRDN R WAT	McLean-Sheridan Rural Water
MDU	Montana-dakota Utilities
MID-CONT CABLE	Mid-Continent Cable
MIDSTATE TEL	Midstate Telephone Company
MINOT CABLE	Minot Cable Television
MINOT TEL	Minot Telephone Company
MISS VALL COMM	Missouri Valley Communications
MISS W W S	Missouri West Water System
MNKOTA PWR	Minnkota Power
MOR-GRAN-SOU ELEC	Mor-gran-sou Electric Cooperative
MOUNT-WILLI ELEC	Mountrail-williams Electric Cooperative
MRE LBTY TEL	Moore & Liberty Telephone
MUNICIPAL	City Water And Sewer
MUNICIPAL	City Of '.....'
N CENT ELEC	North Central Electric Cooperative
N VALL W DIST	North Valley Water District
ND PKS & REC	North Dakota Parks And Recreation
ND TEL	North Dakota Telephone Company
NDDOT	North Dakota Department of Transportation
NDSU SOIL SCI DEPT	NDSU Soil Science Department
NEMONT TEL	Nemont Telephone
NODAK R ELEC	Nodak Rural Electric Cooperative
NOON FRMS TEL	Noonan Farmers Telephone Company
NPR	Northern Plains Railroad
NSP	Northern States Power
NTH PRAIR RW	Northern Prairie Rural Water Association
NTHN BRDR PL	Northern Border Pipeline
NTHN PLNS ELEC	Northern Plains Electric Cooperative Incorporated
NTHWSTRN REF	Northwestern Refinery Company
NW COMM	Northwest Communication Cooperation
ONEOK	Oneok gas
OSHA	Occupational Safety and Health Administration
OTTR TL PWR	Otter Tail Power Company
P L E M	Prairielands Energy Marketing
POLAR COM	Polar Communications
PVT ELEC	Private Electric
QWEST	Qwest Communications
R&T W SUPPLY	R & T Water Supply Association
RAMSEY R SEW	Ramsey Rural Sewer Association
RAMSEY RW	Ramsey Rural Water Association
RAMSEY UTIL	Ramsey County Rural Utilities
RED RIV TEL	Red River Rural Telephone
RESVTN TEL	Reservation Telephone
ROBRTS TEL	Roberts Company Telephone
R-RIDER ELEC	Roughrider Electric Cooperative
RRVW	Red River Valley & Western Railroad
S CENT REG WD	South Central Regional Water District
S E W U	South East Water Users Incorporated
SCOTT CABLE	Scott Cable Television Dickinson
SHERDN ELEC	Sheridan Electric Cooperative
SHEYN VLY ELEC	Sheyenne Valley Electric Cooperative
SKYTECH	Skyland Technologies Incorporated
SLOPE ELEC	Slope Electric Cooperative Incorporated
SOURIS RIV TELCOM	Souris River Telecommunications
ST WAT COMM	State Water Commission
STATE LN WATER	State Line Water Cooperative
STER ENG	Sterling Energy
STUT RWU	Stutsman Rural Water Users
SW PL PRJ	Southwest Pipeline Project
T M C	Turtle Mountain Communications
TCI	TCI of North Dakota
TESORO HGH PLNS PL	Tesoro High Plains Pipeline
TRI-CNTY WU	Tri-County Water Users Incorporated
TRL CO RWU	Traill County Rural Water Users
UNTD TEL	United Telephone
UPPR SOUR WUA	Upper Souris Water Users Association
US SPRINT	U.S. Sprint
USAF MSL CABLE	U.S.A.F. Missile Cable
USFWS	US Fish and Wildlife Service
USW COMM	U.S. West Communications
VRNDRY ELEC	Verendrye Electric Cooperative
W RIV TEL	West River Telephone Incorporated
WEB	W. E. B. Water Development Association
WILLI RWA	Williams Rural Water Association
WILSTN BAS PL	Williston Basin Interstate Pipeline Company
WLSH RWD	Walsh Water Rural Water District
WOLVRTN TEL	Wolverton Telephone
XLENER	Xcel Energy
YSVR	Yellowstone Valley Railroad

NORTH DAKOTA
DEPARTMENT OF TRANSPORTATION

07-01-14

REVISIONS

DATE	CHANGE
04-23-18	General Revisions

This document was originally issued and sealed by Roger Weigel, Registration Number PE- 2930, on 04/23/18 and the original document is stored at the North Dakota Department of Transportation

Line Styles

D-101-20

Existing Topography

- Existing Ground Void
- Existing Cemetary Boundary
- Existing Box Culvert Bridge
- Existing Concrete Surface
- Existing Drainage Structure
- Existing Gravel Surface
- Existing Riprap
- Existing Dirt Surface
- Existing Asphalt Surface
- Existing Tie Point Line
- Existing Railroad Centerline
- Existing Guardrail Cable
- Existing Guardrail Metal
- Existing Edge of Water
- Existing Fence
- Existing Railroad
- Existing Field Line
- Exst Flow
- Existing Curb
- Existing Valley Gutter
- Existing Driveway Gutter
- Existing Curb and Gutter
- Existing Mountable Curb and Gutter
- Existing 3-Cable w Posts
- Site Boundary
- Existing Berm, Dike, Pit, or Earth Dam
- Existing Ditch Block
- Existing Tree Boundary
- Existing Brush or Shrub Boundary
- Existing Retaining Wall
- Existing Planter or Wall
- Existing W-Beam Guardrail with Posts
- Existing Railroad Switch
- Gravel Pit - Borrow Area
- Existing Wet Area-Vegetation Break

Proposed Topography

- 3-Cable w Posts
- Flow
- Fence
- Remove Line
- Wall
- Retaining Wall (Plan View)
- W-Beam w Posts

Existing Utilities

- Existing Electrical
- Existing Fiber Optic Line
- Existing TV Fiber Optic
- Existing Gas Pipe
- Existing Overhead Utility Line
- Existing Power
- Existing Fuel Pipeline
- Existing Undefined Above Ground Pipe Line
- Existing Sanitary Sewer
- Existing Sanitary Force Main
- Existing Storm Drain
- Existing Storm Drain Force Main
- Existing Culvert
- Existing Telephone Line
- Existing TV Line
- Existing Water or Steam Line
- Existing Under Drain
- Existing Slotted Drain
- Existing Conduit
- Existing Conductor
- Existing Down Guy Wire Down Guy
- Existing Underground Vault or Lift Station

Proposed Utilities

- 24 Inch Pipe
- Reinforced Concrete Pipe
- Under Drain
- Edge Drain

Traffic Utilities

- Conductor
- Fiber Optic
- Existing Loop Detector
- Existing Double Micro Loop Detector
- Micro Loop Detector Double
- Existing Micro Loop Detector
- Micro Loop Detector
- Signal Head with Mast Arm
- Existing Signal Head with Mast Arm

Sign Structures

- Existing Overhead Sign Structure
- Existing Overhead Sign Structure Cantilever
- Overhead Sign Structure Cantilever

NORTH DAKOTA
DEPARTMENT OF TRANSPORTATION

07-01-14

REVISIONS

DATE	CHANGE
09-23-16	Added and Revised Items, Organized by Functional Groups

This document was originally issued and sealed by Roger Weigel, Registration Number PE- 2930, on 09/23/16 and the original document is stored at the North Dakota Department of Transportation

Line Styles

D-101-21

Right Of Way

- Easement
- Existing Easement
- Right of Way
- Existing Right of Way
- Existing Right of Way Railroad
- Existing Right of Way Not State Owned
- Existing Government Lot Line
- Existing Adjacent Block Lines
- Existing Adjacent Lot Lines
- Existing Adjacent Property Line
- Existing Adjacent Subdivision Lines
- Sight Distance Triangle Line
- Dimension Leader

Boundary Control

- Existing City Corporate Limits or Reservation Boundary
- Existing State or International Line
- Existing Township
- Existing County
- Existing Section Line
- Existing Quarter Section Line
- Existing Sixteenth Section Line
- Existing Centerline
- Tangent Line

Cross Sections and Typicals

- Existing Ground
- Existing Topsoil (Cross Section View)
- Void — Void — Void — V Existing Ground Void (Not Surveyed)
- Existing Concrete
- Existing Aggregate (Cross Section View)
- Existing Curb and Gutter (Cross Section View)
- Existing Asphalt (Cross Section View)
- Existing Reinforcement Rebar

Geotechnical

- D — D Geotextile Fabric Type D
- Geo — Geo Geogrid
- R — R Geotextile Fabric Type R
- R — R Geotextile Fabric Type R1
- RR — RR Geotextile Fabric Type RR
- S — S Geotextile Fabric Type S
- Subgrade Reinforcement
- Failure Line

Countours

- Depression Contours
- Supplemental Contour

Profile

- Subgrade, Subcut or Ditch Grade
- Topsoil Profile

Striping

- Centerline Pavement Marking
- Barrier with Centerline Pavement Marking
- Barrier Pavement Marking
- Stripe 4 IN Dotted Extension White
- Stripe 8 IN Dotted Extension White
- Stripe 8 IN Lane Drop

Pavement Joints

- Doweled Joint
- Tie Bar 30 Inch 4 Foot Center to Center
- Tie Bar 18 Inch 3 Foot Center to Center
- Tie Bar at Random Spacing

Bridge Details

- Hidden Object
- Small Hidden Object
- Large Hidden Object
- Phantom Object
- Centerline Main
- Centerline
- Existing Ground (Details)
- Existing Conditions
- Sheet Piling

Erosion Control

- Limits of Const Transition Line
- Bale Check
- Rock Check
- S — S Floating Silt Curtain
- SF — SF Silt Fence
- Excavation Limits
- Fiber Rolls

Environmental

- Wetland Mitigation
- Existing Wetland Easement USFWS
- Existing Wetland Jurisdictional
- Existing Wetland
- Tree Row

NORTH DAKOTA DEPARTMENT OF TRANSPORTATION	
07-01-14	
REVISIONS	
DATE	CHANGE
09-23-16	Added and Revised Items, Organized by Functional Groups

This document was originally issued and sealed by Roger Weigel, Registration Number PE- 2930, on 09/23/16 and the original document is stored at the North Dakota Department of Transportation

Symbols

D-101-30

- North Arrow (Half Scale)
- Truck Mounted Attenuator
- Type I Barricade
- Type II Barricade
- Type III Barricade
- Catch Basin
- Cairn or Stone Circle
- Video Detection Camera
- Storm Drain Cap or Stub
- Corrugated Metal End Section 18 Inch
- Corrugated Metal End Section 24 Inch
- Corrugated Metal End Section 30 Inch
- Corrugated Metal End Section 36 Inch
- Corrugated Metal End Section 42 Inch
- Corrugated Metal End Section 48 Inch
- Concrete Foundation
- Ground Connection Conductor
- Neutral Connection Conductor
- Phase 1 Connection Conductor
- Phase 2 Connection Conductor
- Traffic Cone
- Signal Controller
- Pad Mounted Signal Controller
- Alignment Data Point
- Emergency Vehicle Detector
- Attenuation Device
- Diamond Grade Delineator Type A
- Diamond Grade Delineator Type B
- Diamond Grade Delineator Type C
- Diamond Grade Delineator Type D
- Diamond Grade Delineator Type E
- Flexible Delineator
- Flexible Delineator Type A
- Flexible Delineator Type B
- Flexible Delineator Type C
- Flexible Delineator Type D
- Flexible Delineator Type E
- Delineator Type A
- Delineator Type A Reset
- Delineator Type B
- Delineator Type B Reset
- Delineator Type C
- Delineator Type D
- Delineator Type E
- Delineator Drums
- Spot Elevation
- Existing Access Control Arrow
- Existing Artifact
- Existing Flashing Beacon
- Existing Benchmark
- Existing Railroad Battery Box
- Existing Bush or Shrub
- Existing Gas Cap or Stub
- Existing Sanitary Cap or Stub
- Existing Storm Drain Cap or Stub
- Existing Water Cap or Stub
- Existing Sanitary Cleanout
- Existing Concrete Foundation
- Existing Traffic Signal Controller
- Existing Pad Mounted Signal Controller
- Existing Sixteenth Section Corner
- Existing Quarter Section Corner
- Existing Section Corner
- Existing Railroad Crossbuck
- Existing Satellite Dish
- Existing Fuel Dispensers
- Existing Flexible Delineator Type A
- Existing Flexible Delineator Type B
- Existing Flexible Delineator Type C
- Existing Flexible Delineator Type D
- Existing Flexible Delineator Type E
- Existing Delineator Type A
- Existing Delineator Type B
- Existing Delineator Type C
- Existing Delineator Type D
- Existing Delineator Type E
- Existing EFB Misc
- Existing Flashing Beacon
- Existing Pipe Mounted Flasher
- Existing Pad Mounted Feed Point
- Existing Pipe Mounted Feed Point with Pad
- Existing Pole Mounted Feed Point
- Existing Railroad Frog
- Existing Snow Gate 18
- Existing Snow Gate 28
- Existing Snow Gate 40
- Existing Headwall
- Existing Pedestrian Head with Number
- Existing Signal Head
- Existing Sprinkler Head
- Existing Fire Hydrant
- Existing Catch Basin Drop Inlet
- Existing Curb Inlet
- Existing Manhole Inlet
- Existing Junction Box

NORTH DAKOTA DEPARTMENT OF TRANSPORTATION	
07-01-14	
REVISIONS	
DATE	CHANGE

This document was originally issued and sealed by Roger Weigel, Registration Number PE-2930, on 07/01/14 and the original document is stored at the North Dakota Department of Transportation

Symbols

D-101-31

- Existing Light Standard
- Existing High Mast Light Standard 10 Luminaire
- Existing High Mast Light Standard 3 Luminaire
- Existing High Mast Light Standard 4 Luminaire
- Existing High Mast Light Standard 5 Luminaire
- Existing High Mast Light Standard 6 Luminaire
- Existing High Mast Light Standard 7 Luminaire
- Existing High Mast Light Standard 8 Luminaire
- Existing High Mast Light Standard 9 Luminaire
- Existing Overhead Sign Structure Load Center
- Existing Luminaire
- Existing Light Standard Luminaire
- Existing Federal Mailbox
- Existing Private Mailbox
- Existing Meander Section Corner
- Existing Meter
- Existing Electrical Manhole
- Existing Gas Manhole
- Existing Sanitary Manhole
- Existing Sanitary Force Main Manhole
- Existing Sanitary Manhole with Valve
- Existing Storm Drain Manhole
- Existing Force Main Storm Drain Manhole
- Existing Force Main Storm Drain Manhole with Valve
- Existing Telephone Manhole
- Existing Manhole with Valve Water
- Existing Water Manhole
- Existing Mile Post Type A
- Existing Mile Post Type B
- Existing Mile Post Type C
- Existing Reference Marker
- Existing RW Marker
- Existing Utility Marker
- Iron Monument Found
- Iron Pin R/W Monument
- Existing Object Marker Type I
- Existing Object Marker Type II
- Existing Object Marker Type III
- Existing Electrical Pedestal
- Existing Telephone Pedestal
- Existing Fiber Optic Telephone Pedestal
- Existing TV Pedestal
- Existing Fiber Optic TV Pedestal
- Existing Fuel Filler Pipes
- Existing Traverse PI Aerial Panel
- Existing Pole
- Existing Power Pole
- Existing Power Pole with Transformer
- Existing Telephone Pole
- Existing Wood Pole
- Existing Post
- Existing Pedestrian Push Button Post
- Existing Control Point CP
- Existing Control Point GPS-RTK
- Existing Control Point TRI
- Existing Reference Marker Point NGS
- Existing Pull Box
- Existing Intelligent Transportation Pull Box
- Existing Water Pump
- Existing Slotted Reinforced Concrete Pipe
- Existing RR Profile Spot
- Existing Fuel Leak Sensors
- Existing Highway Sign
- Existing Miscellaneous Spot
- Existing Lighting Standard Pole
- Existing Traffic Signal Standard
- Existing Transformer
- Existing Large Evergreen Tree
- Existing Small Evergreen Tree
- Existing Large Tree
- Existing Small Tree
- Existing Tree Trunk
- Existing Pad Mounted Traffic Signal Control Box
- Existing Undefined Manhole
- Existing Undefined Pull Box
- Existing Undefined Pedestal
- Existing Undefined Valve
- Existing Undefined Pipe Vent
- Existing Gas Valve
- Existing Water Valve
- Existing Fuel Pipe Vent
- Existing Gas Pipe Vent
- Existing Sanitary Pipe Vent
- Existing Storm Drain Pipe Vent
- Existing Water Pipe Vent
- Existing Weather Station
- Existing Ground Water Well Bore Hole
- Existing Windmill or Tower
- Existing Witness Corner
- Flashing Beacon
- Flagger
- Pipe Mounted Flasher
- Sanitary Force Main with Valve

NORTH DAKOTA DEPARTMENT OF TRANSPORTATION	
07-01-14	
REVISIONS	
DATE	CHANGE

This document was originally issued and sealed by Roger Weigel, Registration Number PE-2930, on 07/01/14 and the original document is stored at the North Dakota Department of Transportation

Symbols

D-101-32

- Pad Mounted Feed Point
- Pipe Mounted Feed Point with Pad
- Pole Mounted Feed Point
- Headwall
- Double Headwall with Vegitation Barrier
- Single Headwall with Vegitation Barrier
- Pole Mounted Head
- Sprinkler Head
- Fire Hydrant
- Inlet Type 1
- Inlet Type 2
- Double Inlet Type 2
- Inlet Grate Type 2
- Junction Box
- High Mast Light Standard 10 Luminaire
- High Mast Light Standard 3 Luminaire
- High Mast Light Standard 4 Luminaire
- High Mast Light Standard 5 Luminaire
- High Mast Light Standard 6 Luminaire
- High Mast Light Standard 7 Luminaire
- High Mast Light Standard 8 Luminaire
- High Mast Light Standard 9 Luminaire
- Relocate Light Standard
- Overhead Sign Structure Load Center
- Light Standard 100 Watt High Pressure Sodium Vapor Luminaire
- Light Standard 1000 Watt High Pressure Sodium Vapor Luminaire
- Light Standard 150 Watt High Pressure Sodium Vapor Luminaire
- Light Standard 175 Watt High Pressure Sodium Vapor Luminaire
- Light Standard 200 Watt High Pressure Sodium Vapor Luminaire
- Light Standard 250 Watt High Pressure Sodium Vapor Luminaire
- Light Standard 310 Watt High Pressure Sodium Vapor Luminaire
- Light Standard 35 Watt High Pressure Sodium Vapor Luminaire
- Light Standard 400 Watt High Pressure Sodium Vapor Luminaire
- Light Standard 50 Watt High Pressure Sodium Vapor Luminaire
- Light Standard 70 Watt High Pressure Sodium Vapor Luminaire
- Light Standard 700 Watt High Pressure Sodium Vapor Luminaire
- Manhole
- Manhole 48 Inch
- Sanitary Force Main Manhole
- Sanitary Sewer Manhole
- Storm Drain Manhole
- Storm Drain Manhole with Inlet
- Reset Mile Post
- Mile Post Type A
- Mile Post Type B
- Mile Post Type C
- Right of Way Marker
- Tubular Marker
- Alignment Monument
- Iron Pin Reference Monument
- Object Marker Type I
- Object Marker Type II
- Object Marker Type III
- Caution Mode Arrow Panel
- Back to Back Vertical Panel Sign
- Double Direction Arrow Panel
- Left Directional Arrow Panel
- Right Directional Arrow Panel
- Sequencing Arrow Panel
- Truck Mounted Arrow Panel
- Power Pole
- Wood Pole
- Pedestrian Push Button Post
- Property Corner
- Pull Box
- Intelligent Transportation Pull Box
- Sanitary Pump
- Storm Drain Pump
- Reinforced Pavement
- Reinforced Concrete End Section 15 Inch
- Reinforced Concrete End Section 18 Inch
- Reinforced Concrete End Section 24 Inch
- Reinforced Concrete End Section 30 Inch
- Reinforced Concrete End Section 36 Inch
- Reinforced Concrete End Section 42 Inch
- Reinforced Concrete End Section 48 Inch
- Reinforced Concrete End Section 54 Inch
- Reset Right of Way Marker
- Reset USGS Marker
- Right of Way Markers
- Riser 30 Inch
- CSB — Continuous Split Barrel Sample
- FA — Flight Auger Sample
- SB — Split Barrel Sample
- T — Thinwall Tube Sample
- Highway Sign
- SNOW GATE 18 FT
- SNOW GATE 28 FT
- SNOW GATE 40 FT
- N — Standard Penetration Test
- Transformer
- Incl — Inclinometer Tube
- Underdrain Cleanout
- Excavation Unit
- Water Valve

NORTH DAKOTA DEPARTMENT OF TRANSPORTATION	
07-01-14	
REVISIONS	
DATE	CHANGE

This document was originally issued and sealed by Roger Weigel, Registration Number PE-2930, on 07/01/14 and the original document is stored at the North Dakota Department of Transportation

D-255-2

EROSION AND SILTATION CONTROL
EROSION CONTROL BLANKET INSTALLATION

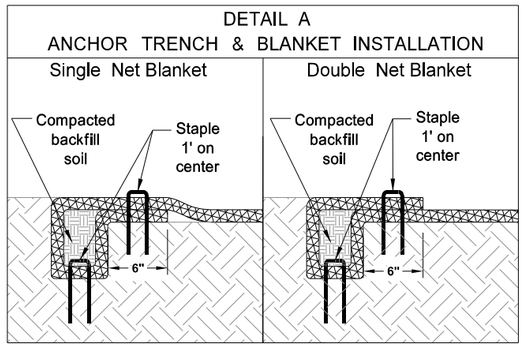

NOTE:
If a Single Net Blanket is used the side with the netting should be on the top once the blanket is installed.

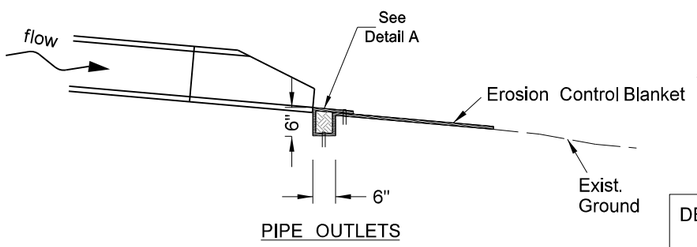

PIPE OUTLETS

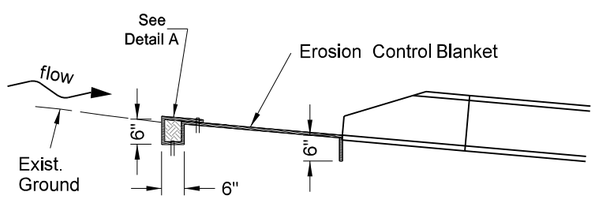

PIPE INLETS

INSTALLATION AT PIPE ENDS

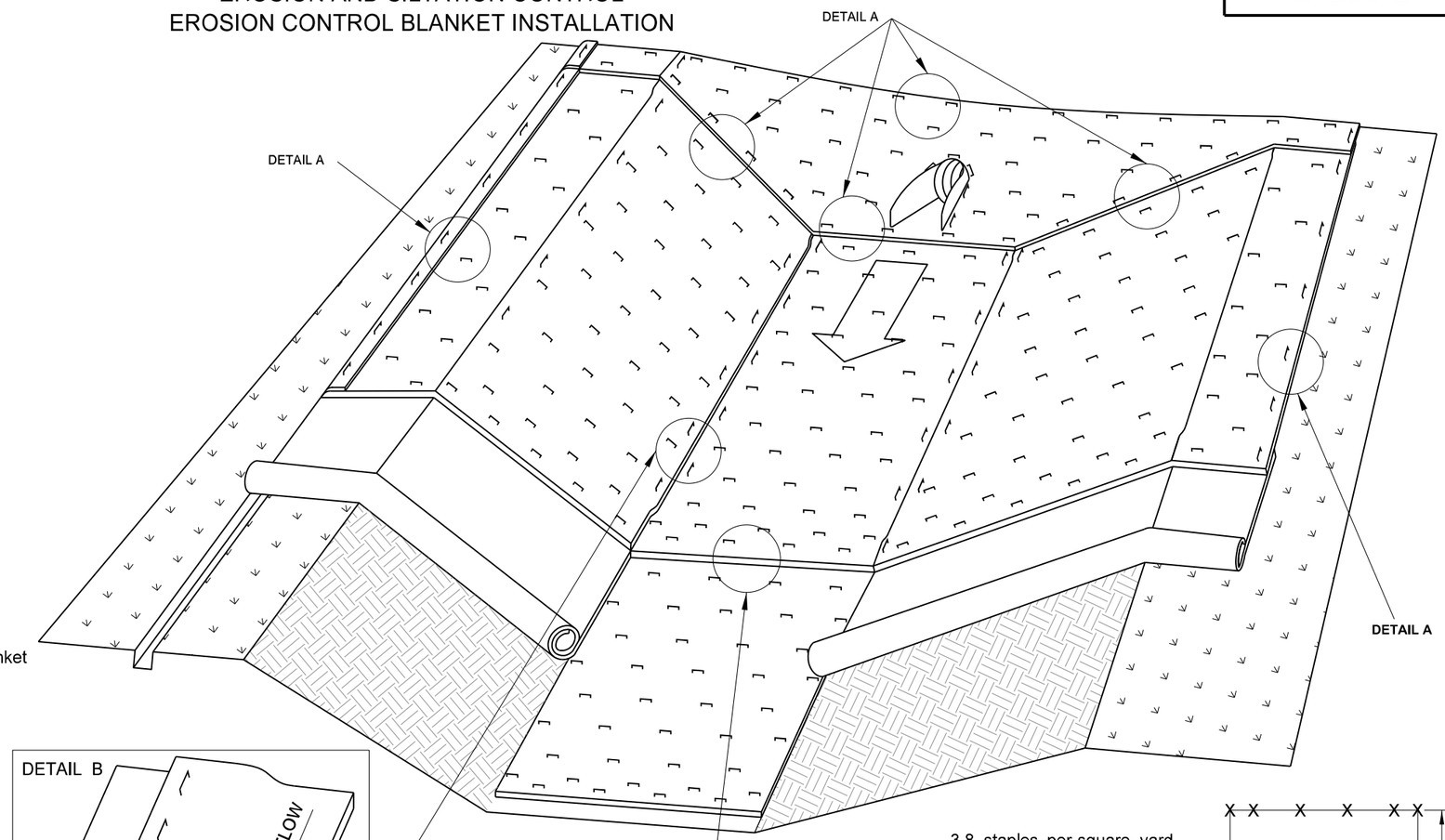

BLANKET LAYOUT
CHANNEL OR SLOPE INSTALLATION

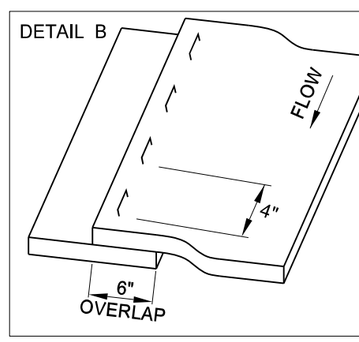

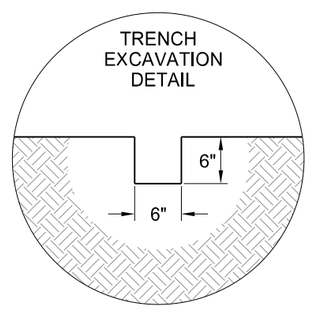

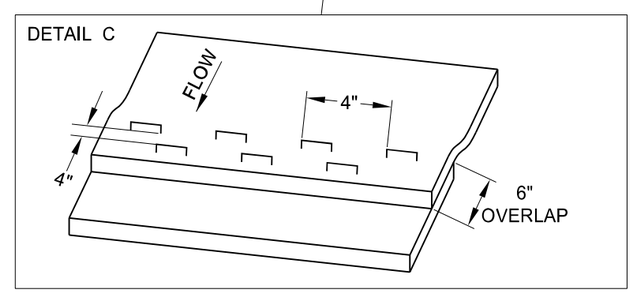

3.8 staples per square yard using 8-inch 11 gauge wire "u" staples.

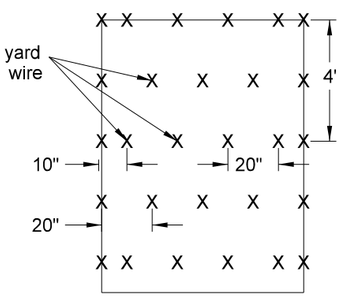

STAPLE PATTERN

NORTH DAKOTA DEPARTMENT OF TRANSPORTATION	
10-03-13	
REVISIONS	
DATE	CHANGE
06-26-14	Changed standard drawing number from D-708-5 to D-255-2.
07-27-15	Changed installation details such as trench depth and overlap dimensions.

This document was originally issued and sealed by Roger Weigel Registration Number PE-2930, on 07/27/15 and the original document is stored at the North Dakota Department of Transportation

EROSION AND SILTATION CONTROLS - SILT FENCE

D-260-1

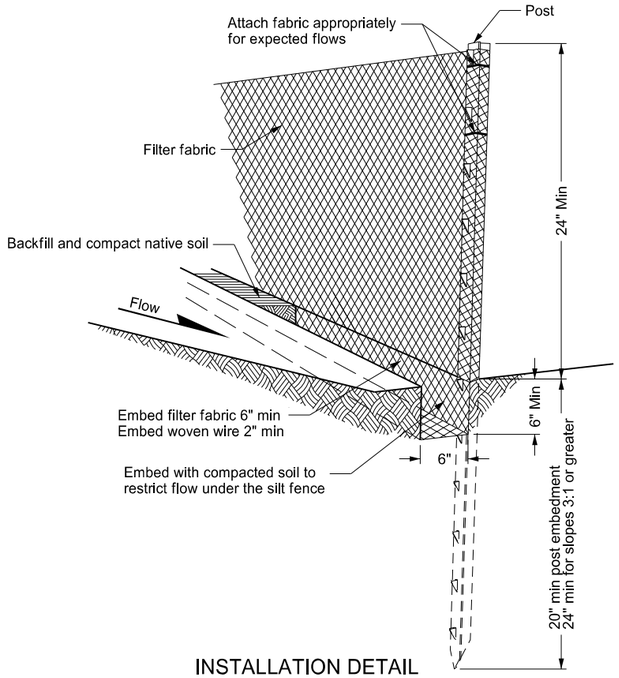

INSTALLATION DETAIL

Minimize disturbance of ground around trench and smooth surface after excavation to avoid concentrating flows. Compact to prevent undercutting flows.

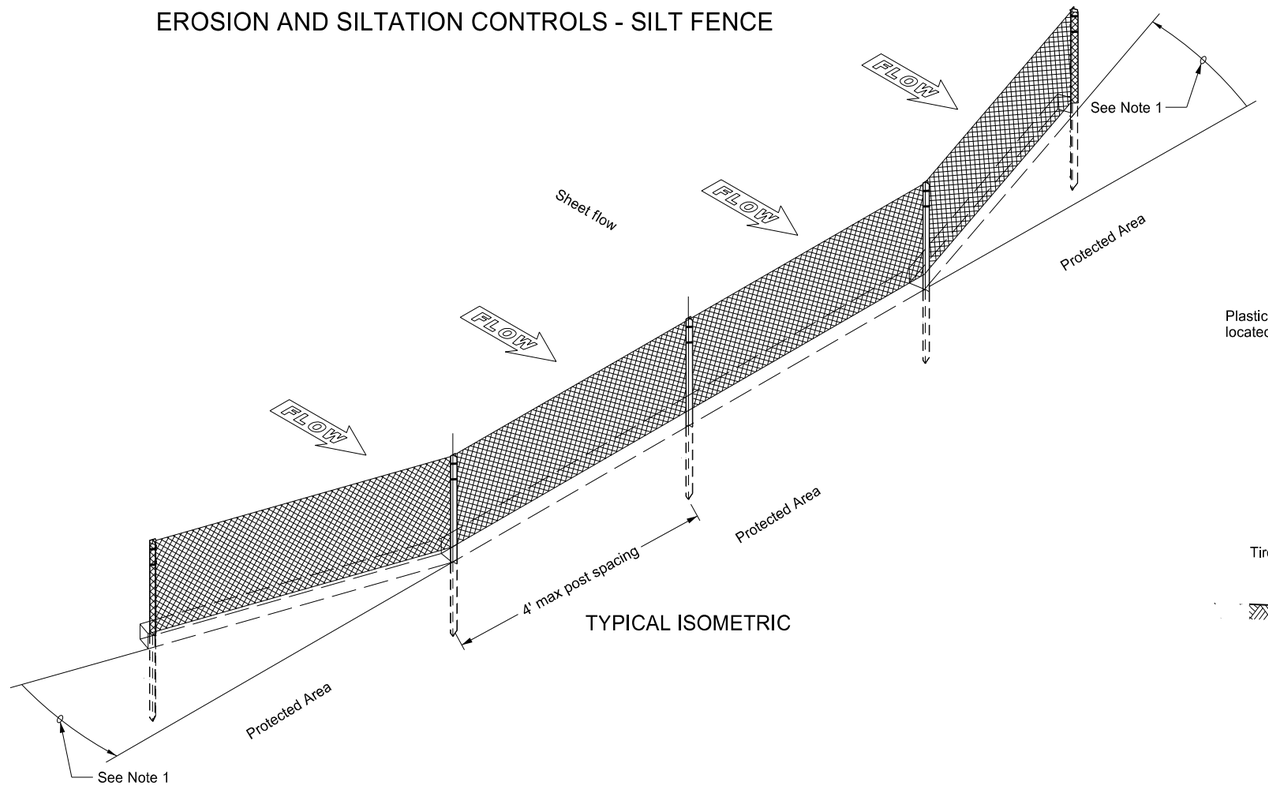

TYPICAL ISOMETRIC

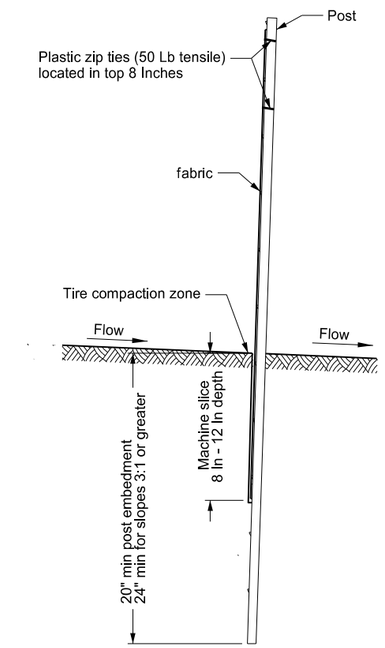

MACHINE SLICED SILT FENCE

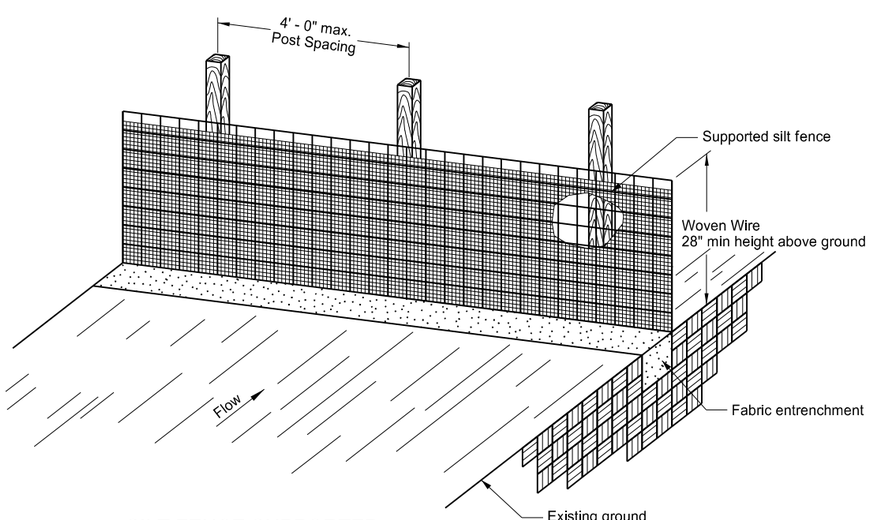

SILT FENCE SUPPORTED

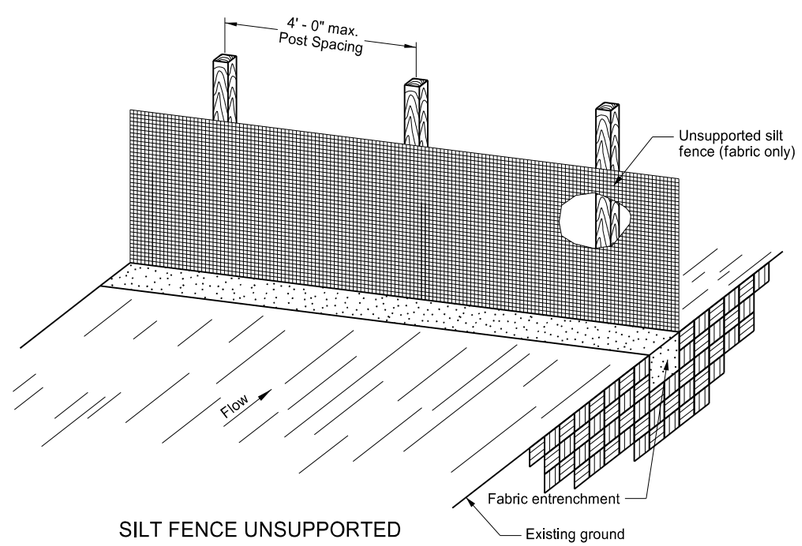

SILT FENCE UNSUPPORTED

NOTES:
1. Install the ends of the silt fence to point slightly upslope to prevent sediment from flowing around the ends of the fence.
2. Place splices outside low spots.
3. Install silt fencing parallel to contour lines.
4. Do not embed silt fence when placed in standing water.
5. Silt fence material does not need to reach the top of woven wire support.

NORTH DAKOTA DEPARTMENT OF TRANSPORTATION

10-03-13

REVISIONS

DATE	CHANGE
06-26-14	Standard drawing resulted from splitting standard D-708-2.
06-27-16	Revised details & added new ones.

This document was originally issued and sealed by Roger Weigel Registration Number PE- 2930, on 06/27/16 and the original document is stored at the North Dakota Department of Transportation

EROSION CONTROL
FIBER ROLL PLACEMENT DETAILS

D-261-1

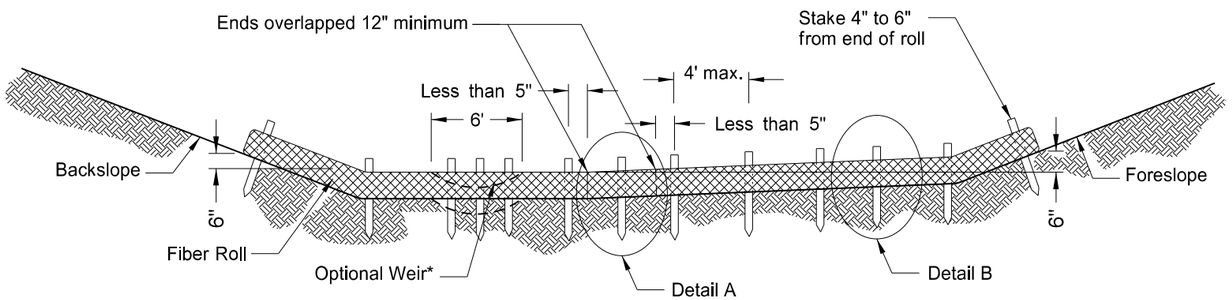

*Optional Weir. Use in flat areas, such as the Red River Valley, where there is potential for water to back up on adjacent property. Lower fiber roll enough to prevent water from backing up on adjacent property. Do not use 20-inch fiber rolls in flat areas where there is potential for water to back up on adjacent property.

12 OR 20 INCH FIBER ROLL - DITCH BOTTOM

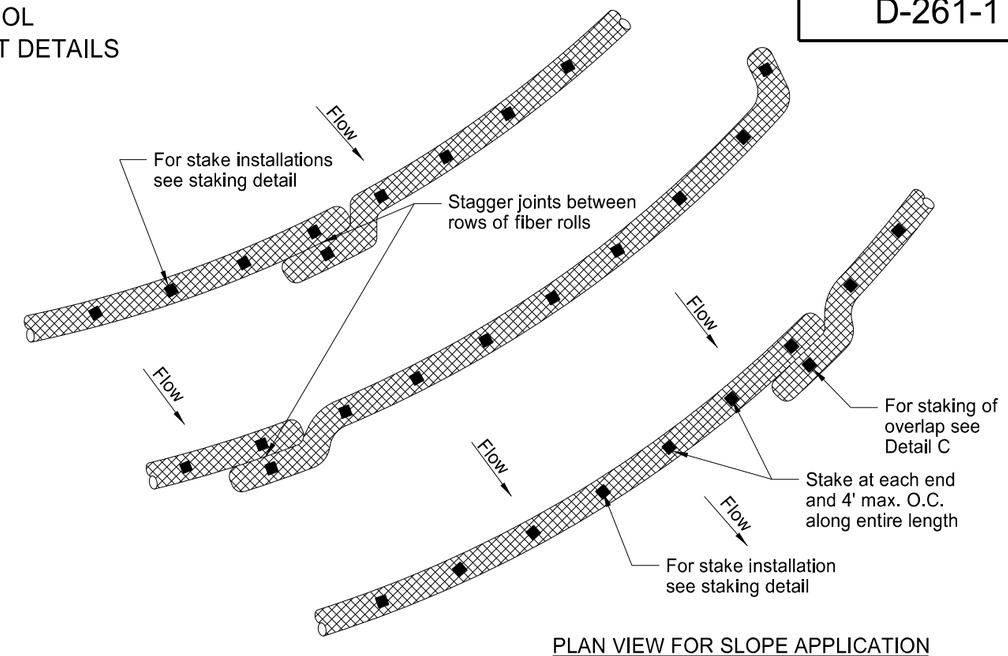

PLAN VIEW FOR SLOPE APPLICATION

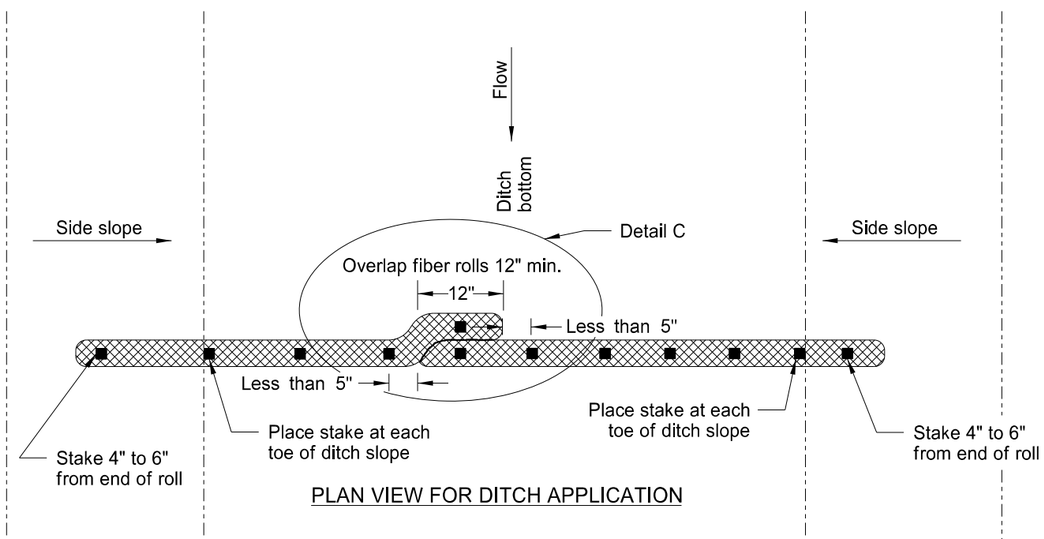

PLAN VIEW FOR DITCH APPLICATION

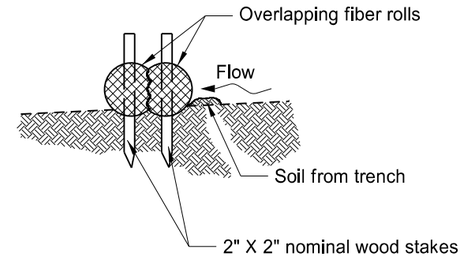

Detail A

Fiber Roll Overlapping Staking Detail

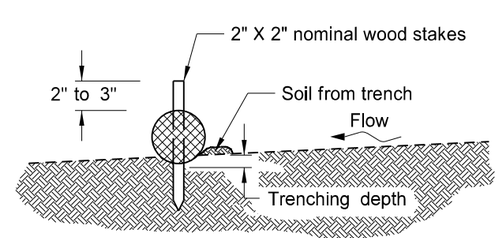

Detail B

Fiber Roll Staking Detail

FIBER ROLL DIAMETER	NOMINAL STAKE SIZE	MINIMUM STAKE LENGTH	MINIMUM TRENCH DEPTH	MAXIMUM TRENCH DEPTH
6"	2" x 2"	18"	2"	2"
12"	2" x 2"	24"	2"	3"
20"	2" x 2"	36"	3"	5"

NOTE: Runoff must not be allowed to run under or around roll.

NORTH DAKOTA DEPARTMENT OF TRANSPORTATION

11-18-10

REVISIONS

DATE	CHANGE
06-10-13	Added plan view for ditch and slope application. Added table with values for stake and trench dimensions.
10-04-13	Revised fiber roll overlap detail.
06-26-14	Changed standard drawing number from D-708-7 to D-261-1.

This document was originally issued and sealed by Roger Weigel, Registration Number PE- 2930, on 06/26/14 and the original document is stored at the North Dakota Department of Transportation

BREAKAWAY SYSTEMS FOR CONSTRUCTION ZONE SIGNS

D-704-7

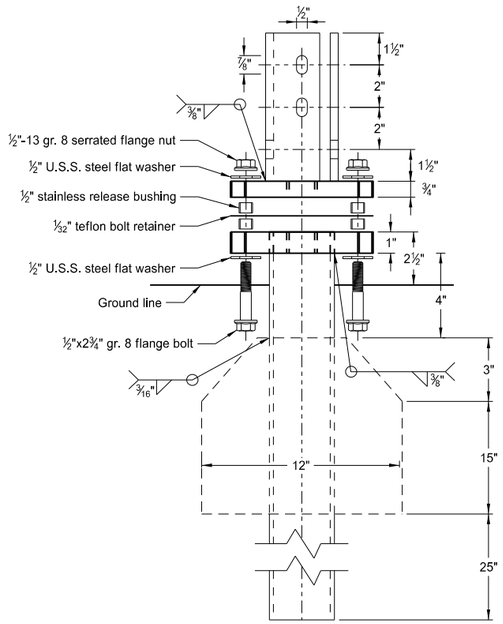

Multi-Directional
Slip Base Assembly

Perforated Tube

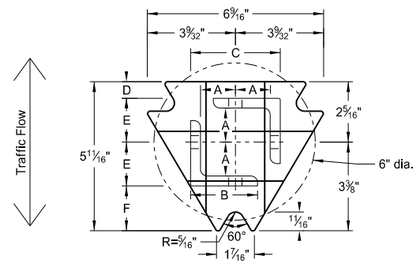

Top Post Receiver
Plate - ASTM A572 grade 50
Angle Receiver - 2½"x2½"x⅜" ASTM A36 structural angle

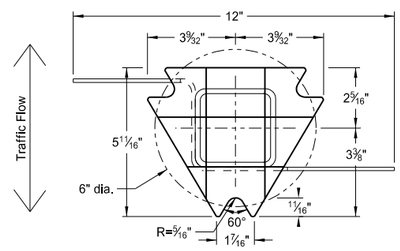

Bottom Soil Stub
Tube - 3"x3"x7 gauge ASTM A500 grade B tube
Stabilizing Wing - 7 gauge H.R.P.O. ASTM A1011
Plate - ASTM A572 grade 50

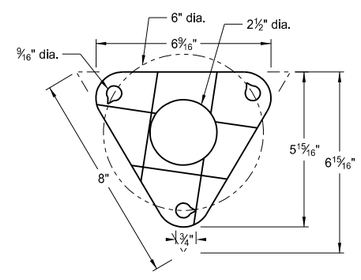

Bolt Retainer for Base Connection
Bolt Retainer- 1/32" Reprocessed Teflon

Notes:

1. Slip base bolts shall be torqued as specified by the manufacturer.
2. Anchor shall have a yield strength of 43.9 KSI and tensile strength of 59.3 KSI.
3. The 4" vertical clearance is required for the anchor or breakaway base. The 4"x60" measurement shall be made above and below post location and also back and ahead of the post.
4. When used in concrete sidewalk, anchor shall be same except without the wings.
5. Four post signs shall have over 7' between the first and the fourth posts.

Telescoping Perforated Tube						
Number of Posts	Post Size in.	Wall Thick-ness Gauge	Sleeve Size in.	Wall Thick-ness Gauge	Slip Base	Anchor Size without Slip Base in.
1	2	12			No	2¼
1	2¼	12			No	2½
1	2½	12			(A)	3
1	2½	10			Yes	
1	2¼	12	2	12	Yes	
1	2½	12	2¼	12	Yes	
2	2	12			No	2¼
2	2¼	12			No	2½
2	2½	12			Yes	
2	2½	12			Yes	
2	2¼	10	2	12	Yes	
2	2½	12	2¼	12	Yes	
3 & 4	2½	12			Yes	
3 & 4	2½	10			Yes	
3 & 4	2½	12	2¼	12	Yes	
3 & 4	2¼	12	2	12	Yes	
3 & 4	2½	10	2 3/16	10	Yes	

(A) The breakaway base is required when the support is placed in weak soils. The Engineer shall determine if the soils are weak.

(B) The 2 3/16"x10 ga. may be inserted into 2½"x10 ga. for additional wind load.

Properties of Telescoping Perforated Tube						
Tube Size in.	Wall Thickness in.	U.S. Standard Gauge	Weight per Foot lbs.	Moment of Inertia in.^{4}	Cross Sec. Area in.^{2}	Section Modulus in.^{3}
1½ x 1½	0.105	12	1.702	0.129	0.380	0.172
2 x 2	0.105	12	2.416	0.372	0.590	0.372
2¼ x 2¼	0.105	12	2.773	0.561	0.695	0.499
2 3/16 x 2 3/16	0.135	10	3.432	0.605	0.841	0.590
2½ x 2½	0.105	12	3.141	0.804	0.803	0.643
2½ x 2½	0.135	10	4.006	0.979	1.010	0.785

Top Post Receiver Data Table						
Square Post Sizes (B)	A	B	C	D	E	F
2 3/16"x10 ga.	1 9/64"	2½"	3 1/32"	25/32"	1 33/64"	1⅞"
2½"x10 ga.	1 9/32"	2½"	3 5/16"	⅝"	1 21/32"	1¾"

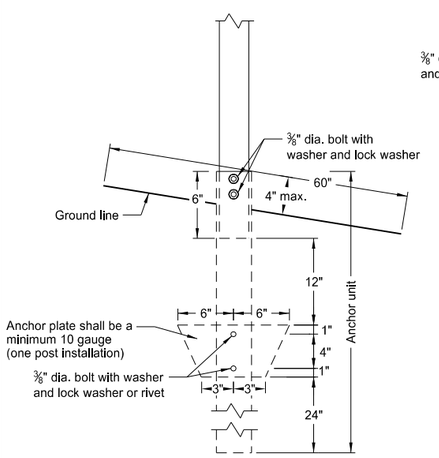

Anchor Unit and Post Assembly

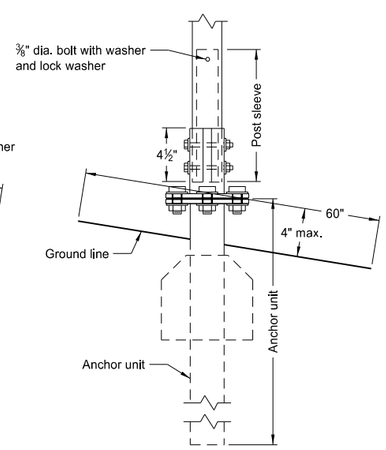

Multi-Directional
Slip Base Anchor Unit
and Post Sleeve Assembly

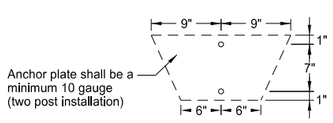

NORTH DAKOTA DEPARTMENT OF TRANSPORTATION	
2-28-14	
REVISIONS	
DATE	CHANGE

This document was originally issued and sealed by Roger Weigel, Registration Number PE- 2930, on 2/28/14 and the original document is stored at the North Dakota Department of Transportation

BREAKAWAY SYSTEMS FOR CONSTRUCTION ZONE SIGNS

D-704-8

U-Channel Post

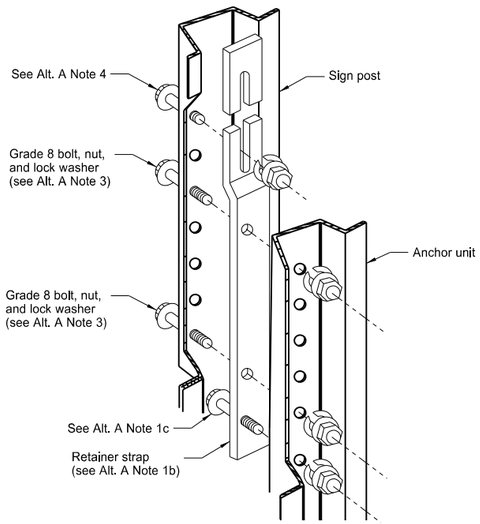

Detail A

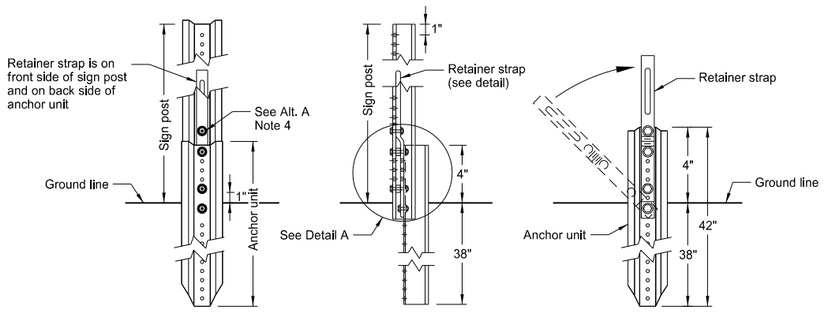

Front View | Side View | Back View

Breakaway U-Channel Detail
Alternate A

A maximum of 2 posts shall be installed within 7'.

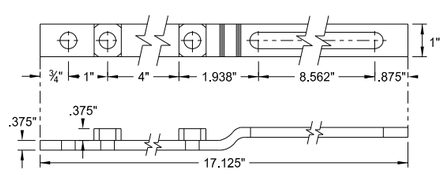

Retainer Strap Detail

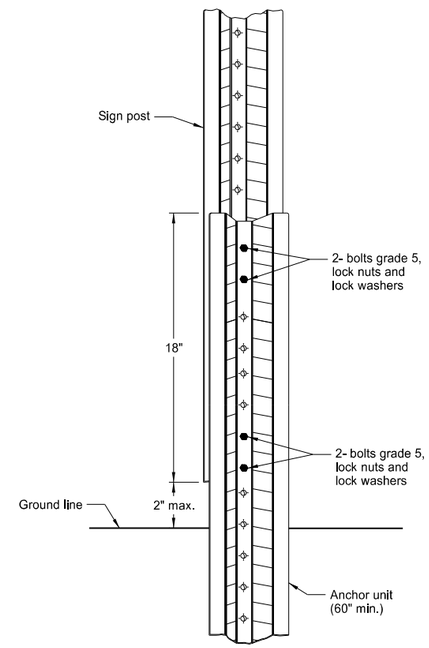

Breakaway U-Channel Splice Detail
Alternate B
(2.5 and 3 lb/ft)

A maximum of 3 posts shall be installed within 7'.

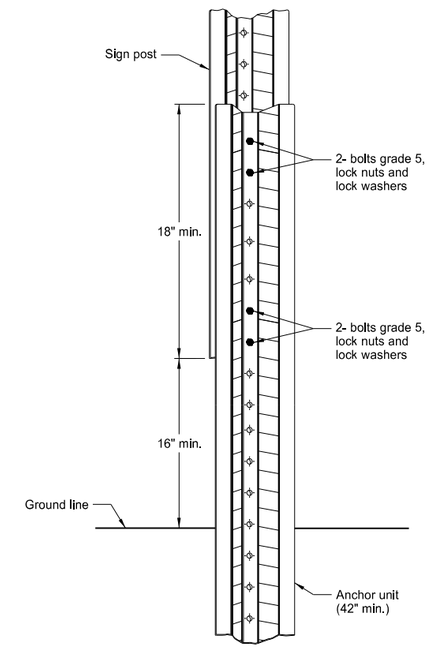

Breakaway U-Channel Splice Detail
Alternate C
(2.5 and 3 lb/ft)

A maximum of 3 posts shall be installed within 7'.

Alternate A Steps of Installation:

1. a) Drive anchor unit to within 12" of ground level.
   b) Proper assembly established by lining up the bottom hole of retainer strap with the 6th hole from the top of the anchor unit.
   c) Assemble strap to back of anchor unit using 5/16"x2" bolt, lock washer and nut.
   d) Rotate strap 90° to left.
2. a) Drive anchor unit to 4" above ground.
   b) Rotate strap to vertical position.
3. a) Place 5/16"x2" bolt, lock washer and nut in bottom of sign post to facilitate alignment of sign post with proper hole in anchor unit.
   b) Alternately tighten two connector bolts.
4. Complete assembly by tightening 5/16"x2" bolt (this fastens sign post to retainer strap).
5. The base post, strap and sign post shall be properly nested. Proper nesting occurs when all flat surfaces of the base post, strap, and sign post at the bolts have full contact across the entire width.

NORTH DAKOTA DEPARTMENT OF TRANSPORTATION	
2-28-14	
REVISIONS	
DATE	CHANGE

This document was originally issued and sealed by Roger Weigel, Registration Number PE- 2930, on 2/28/14 and the original document is stored at the North Dakota Department of Transportation

CONSTRUCTION SIGN DETAILS
TERMINAL AND GUIDE SIGNS

D-704-9

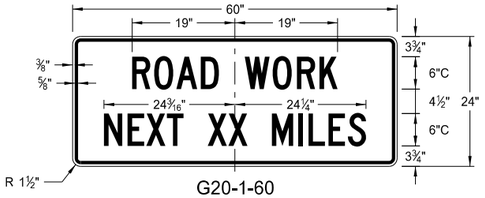

G20-1-60
Legend: black (non-refl)
Background: orange

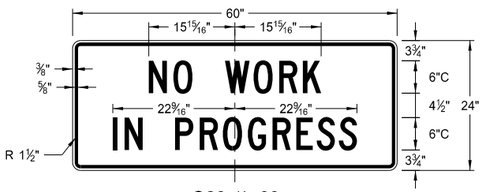

G20-1b-60
Legend: black (non-refl)
Background: orange

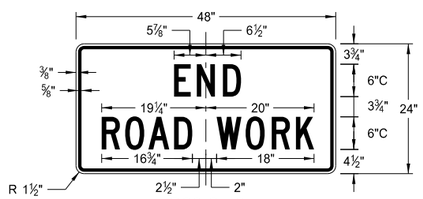

G20-2-48
Legend: black (non-refl)
Background: orange

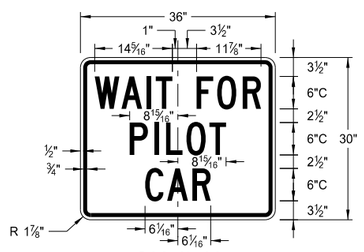

G20-4b-36
Legend: black (non-refl)
Background: orange

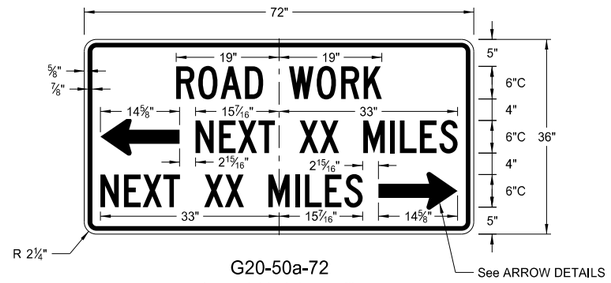

G20-50a-72
Legend: black (non-refl)
Background: orange

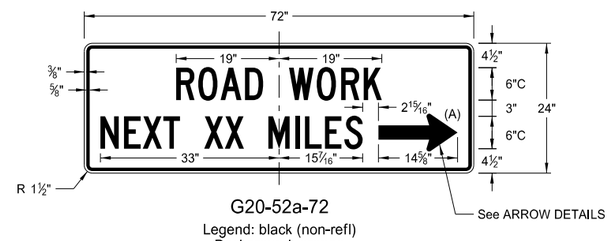

G20-52a-72
Legend: black (non-refl)
Background: orange

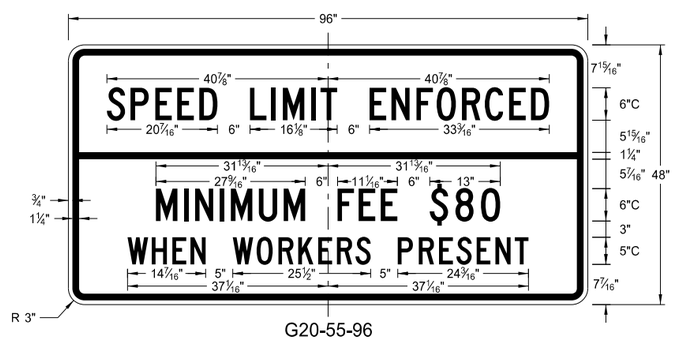

G20-55-96
Legend: black (non-refl)
Background: orange

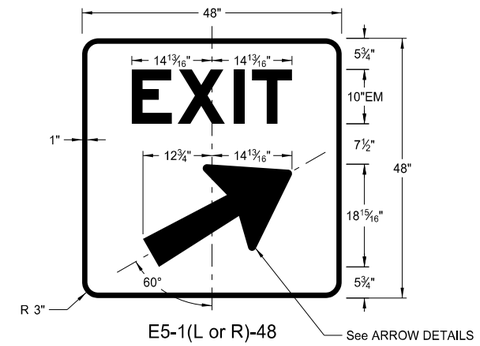

E5-1(L or R)-48
Legend: white
Background: green (orange optional)

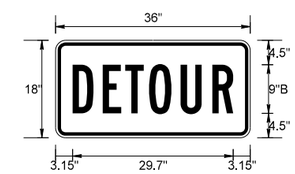

M4-8-36
Legend: black (non-refl)
Background: orange

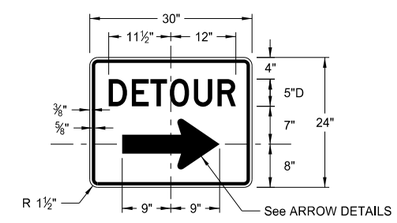

M4-9(L or R)-30 &
M4-9-30
Legend: black (non-refl)
Background: orange

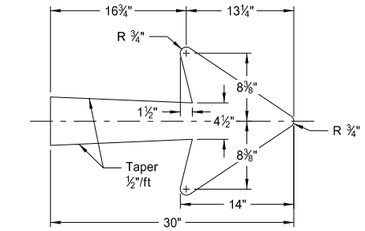

E5-1-48

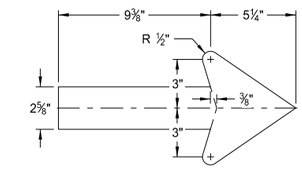

G20-50a-72
G20-52a-72

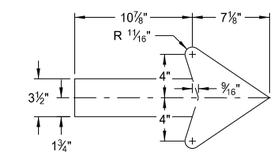

M4-9(L or R)-30
Right or Left

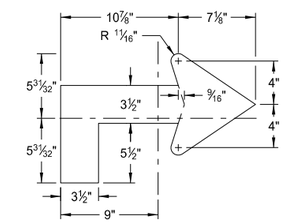

M4-9(L or R)-30
Advanced Right or Left

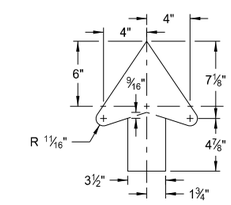

M4-9-30
Straight

ARROW DETAILS

NOTES:

(A) Arrow may be right or left of the legend to indicate construction to the right or left.

NORTH DAKOTA DEPARTMENT OF TRANSPORTATION	
8-13-13	
REVISIONS	
DATE	CHANGE
8-17-17	Added sign & background color

This document was originally issued and sealed by Roger Weigel, Registration Number PE- 2930, on 8/17/17 and the original document is stored at the North Dakota Department of Transportation

STANDARD MONUMENTS AND RIGHT OF WAY MARKERS

D-720-1

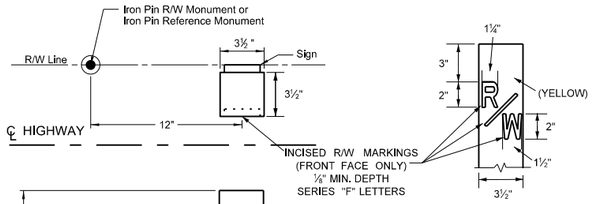

MARKING DETAIL

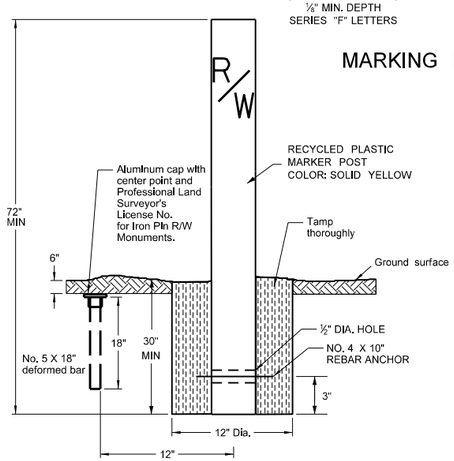

RECYCLED PLASTIC
RIGHT OF WAY MARKER
(WITNESS POST) DETAILS
&
IRON PIN REFERENCE AND R/W
MONUMENT DETAILS

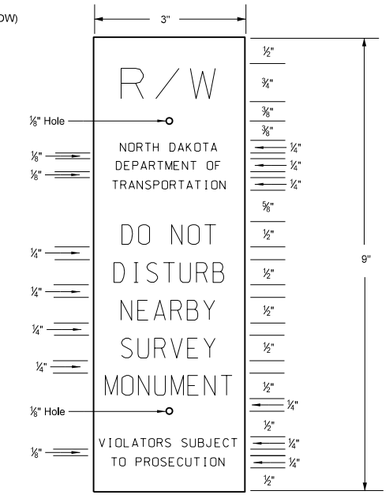

SIGN DETAIL

Black letters on orange high intensity background sheeting meeting ASTM D-4956 Type III or higher on 80 gauge 5052-H38 aluminum. Silk screen graphics. One color print. Attach sign by drilling two holes in the face of the post (side facing the private owner, away from the Department of Transportation right of way). Put inserts into the holes and mount the sign with #4 vandal proof screws. Install sign 2" from top of post.

ALIGNMENT MONUMENT DETAILS

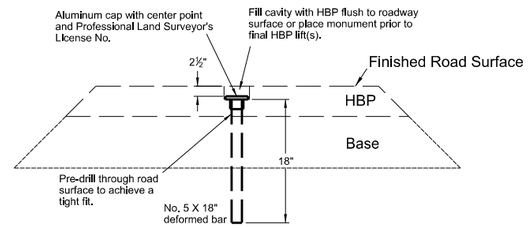

IRON PIN
(Within Finished Roadway Surface)

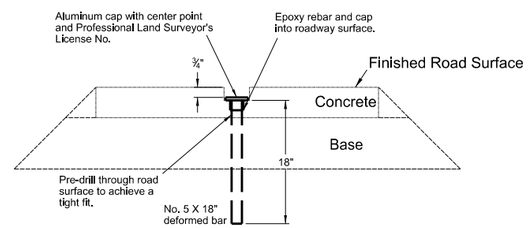

IRON PIN
(Within Finished Roadway Surface)

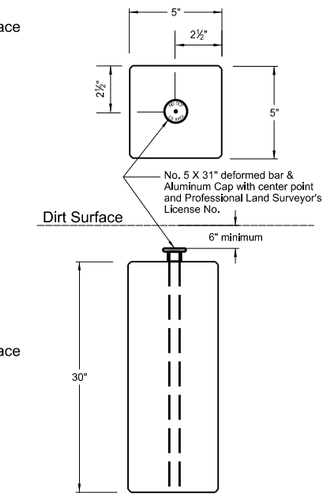

PRECAST CONCRETE
(Outside Finished Roadway Surface)
(Inside R/W Limits)

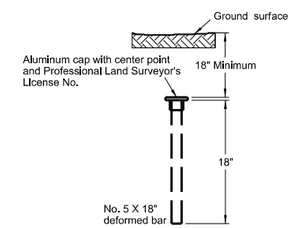

IRON PIN
(Outside Finished Roadway Surface)
(Outside R/W Limits)

NOTES:

Construct and install Alignment Monuments, Iron Pin Reference Monuments, Iron Pin R/W Monuments, and Right of Way Markers (witness posts) according to Section 720 of the Standard Specifications.

ALIGNMENT MONUMENTS: Place Iron Pin or Precast Concrete Alignment Monuments with aluminum caps on the centerline alignment PI's, section corners, quarter corners, section line crossings, quarter line crossings, and at curve points (PC's, PT's, TS's, and ST's) on the centerline.

IRON PIN R/W MONUMENT: Place Iron Pns with aluminum caps (No. 5 X 18") at breaks on the Right of Way line, and at curve points (PC's, PT's, TS's and ST's) on the Right of Way line.

IRON PIN REFERENCE MONUMENT: Place Iron Pins without aluminum caps (No. 5 X 18") as reference monuments on the Right of Way line at section corners, quarter corners, section line crossings, and quarter line crossings.

R/W MARKERS (WITNESS POST) WITHIN DRIVEWAYS: If a single iron Pin R/W or Reference Monument is within a driveway, place right of way marker (witness post) 50 feet back, in stationing, from the Iron Pin Monument along the R/W line. If R/W break is within a driveway, place right of way markers (witness posts) 50 feet back, or ahead from respective Iron Pin R/W Monuments along the R/W lines. Maintain Iron Pin R/W or Reference Monument original position within driveway.

VARIOUS MONUMENT AND MARKER PLACEMENTS

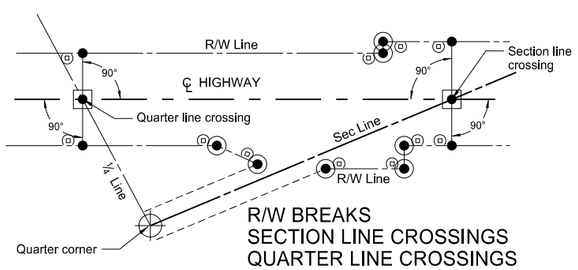

R/W BREAKS
SECTION LINE CROSSINGS
QUARTER LINE CROSSINGS

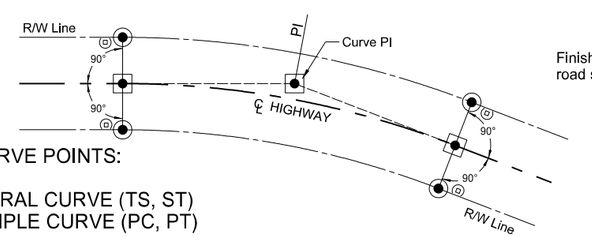

CURVE POINTS:
PI
SPIRAL CURVE (TS, ST)
SIMPLE CURVE (PC, PT)

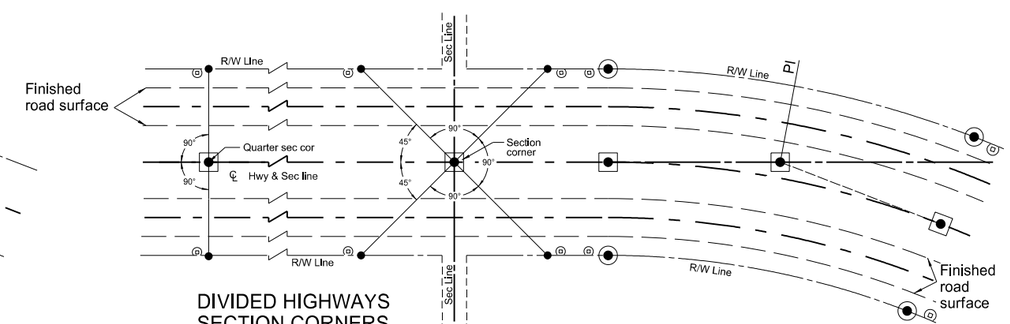

DIVIDED HIGHWAYS
SECTION CORNERS
QUARTER CORNERS

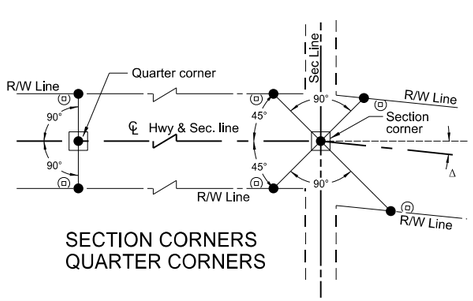

SECTION CORNERS
QUARTER CORNERS

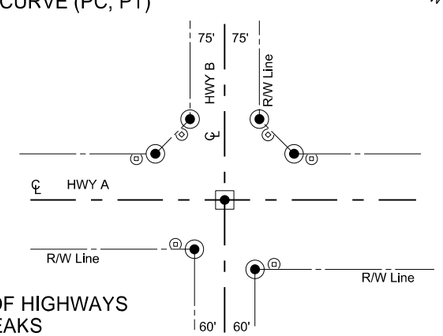

INTERSECTION OF HIGHWAYS
FLARED R/W BREAKS

LEGEND

- Iron Pin Reference Monument
- R/W Marker (witness post)
- Alignment Monument
- Iron Pin R/W Monument

NORTH DAKOTA DEPARTMENT OF TRANSPORTATION	
10-3-2013	
REVISIONS	
DATE	CHANGE
11/12/13	Note for SIGN DETAIL modified to meet ASTM D-4956 Type III or higher on 80 gauge 5052-H38
10/17/17	Updated to active voice.

This document was originally issued and sealed by Roger Weigel Registration Number PE- 2930 , on 10-17-2017 and the original document is stored at the North Dakota Department of Transportation

(CONVENTIONAL USE) REFERENCE MARKERS

D-754-19

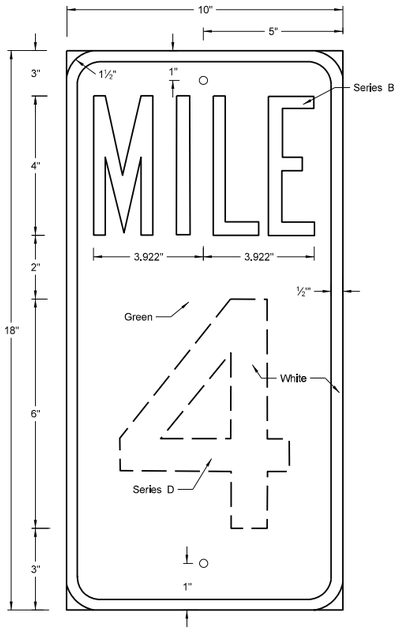

TYPE A
Area = 1.25 S.F.

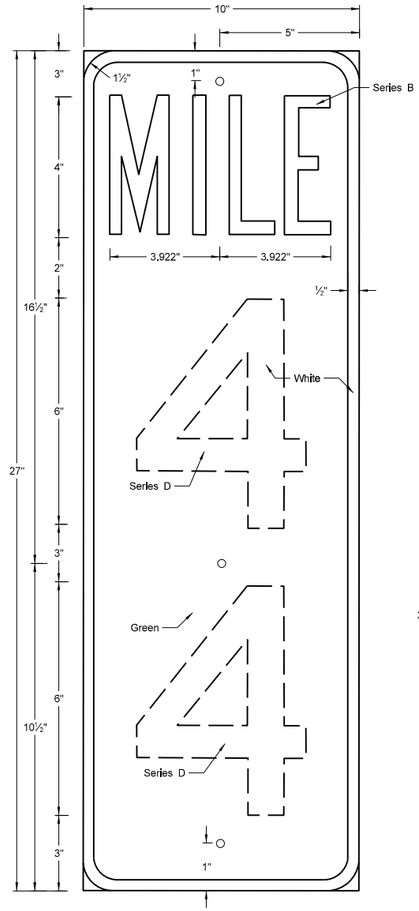

TYPE B
Area = 1.88 S.F.

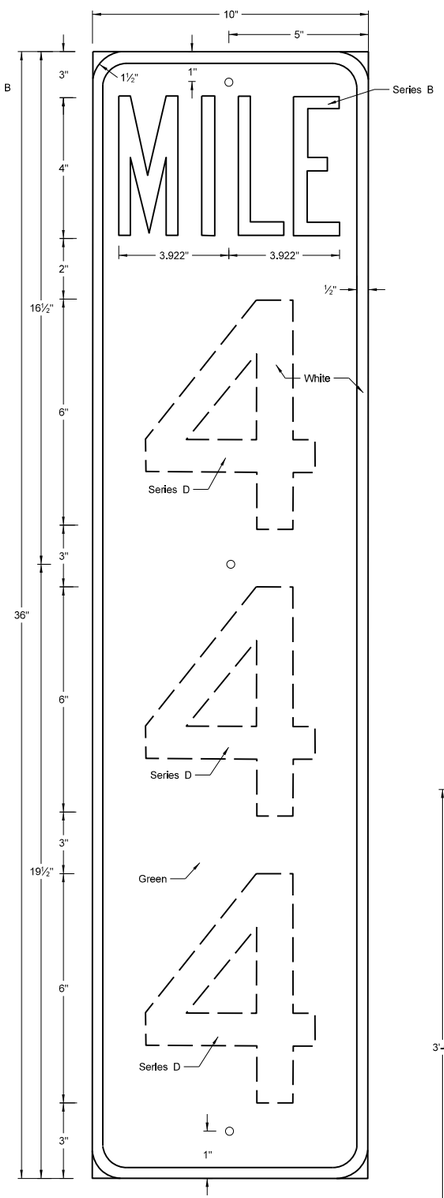

TYPE C
Area = 2.50 S.F.

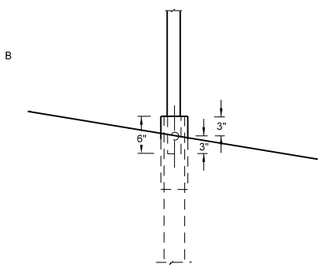

DETAIL "A"

(A) 8' Clearance to finished shoulder or in line with existing delineator posts

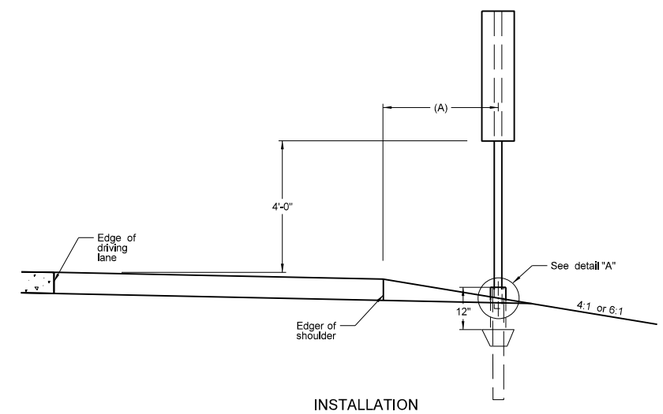

INSTALLATION

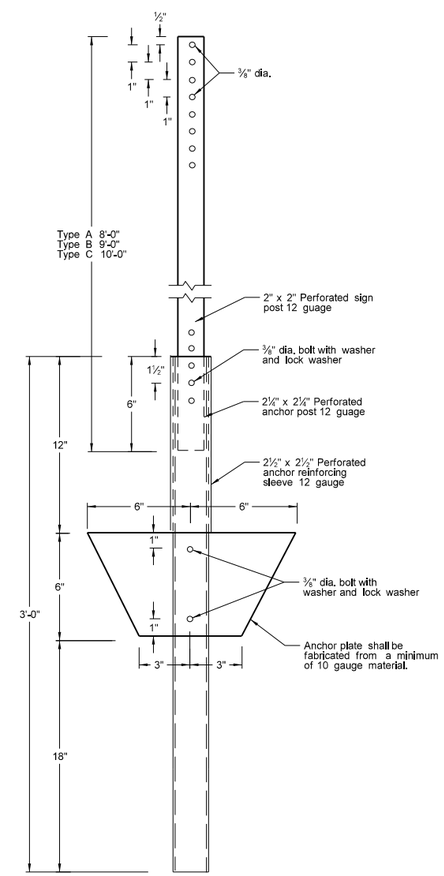

POST AND ANCHOR PLATE DETAIL

NOTES:
Installation: Posts shall be installed along right shoulder.

Sign: Backing shall be fabricated of 0.080 aluminum. Sheeting shall conform to section 894.01 of the Standard Specifications.

Posts: Posts shall conform to section 894.03 of the Standard Specifications.

Fasteners: The signs shall be attached to the post by tension pin type fastener or other suitable vandal resistant non-rust fastener.

Reflective Sheeting: Sheeting shall be Type IV.

Numbers: Numbers shall be of the series shown and may be screened or applied copy. Screening and reflective sheeting for applied copy shall conform to section 754 & 894 of the Standard Specifications.

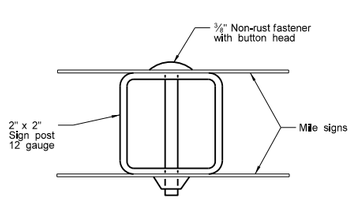

ASSEMBLY DETAIL
(back to back)

NORTH DAKOTA DEPARTMENT OF TRANSPORTATION	
12-1-10	
REVISIONS	
DATE	CHANGE
7-8-14	Revised post and reflective sheeting notes

This document was originally issued and sealed by Roger Weigel, Registration Number PE-2930, on 7/8/14 and the original document is stored at the North Dakota Department of Transportation

PERFORATED TUBE ASSEMBLY DETAILS

D-754-23

Notes:

1. Curbed Roadways: The clearance from the face of the curb should be 3' except where right of way or sidewalk width is limited, a minimum clearance of 2' shall be provided. The horizontal clearance may need to be increased to maintain a minimum sidewalk clear width of 4' from the sign support, not including any attached curb.

2. Minimum vertical clearance: Signs installed at the side of the road in rural districts shall be at least 5' measured from the bottom of the sign to the edge of the driving lane or auxiliary lane. Where parking or pedestrian movements occur, the clearance to the bottom of the sign shall be at least 7'.

   Signs on expressways shall be installed with a minimum height of 7'.

   Adopt-a-highway signs installed on Freeways shall be at least 7' above the edge of the driving lane.

   The vertical clearance shall have a maximum height of 6" above the vertical clearance specified above.

3. Offset signs: Where signs are placed at least 30 feet or more from the edge of the traveled way, the height to the bottom of such sign shall be 5' above the edge of the driving lane.

4. The clearance from edge of shared use path to edge of sign should be 3' except where width is limited, a minimum clearance of 2' shall be provided.

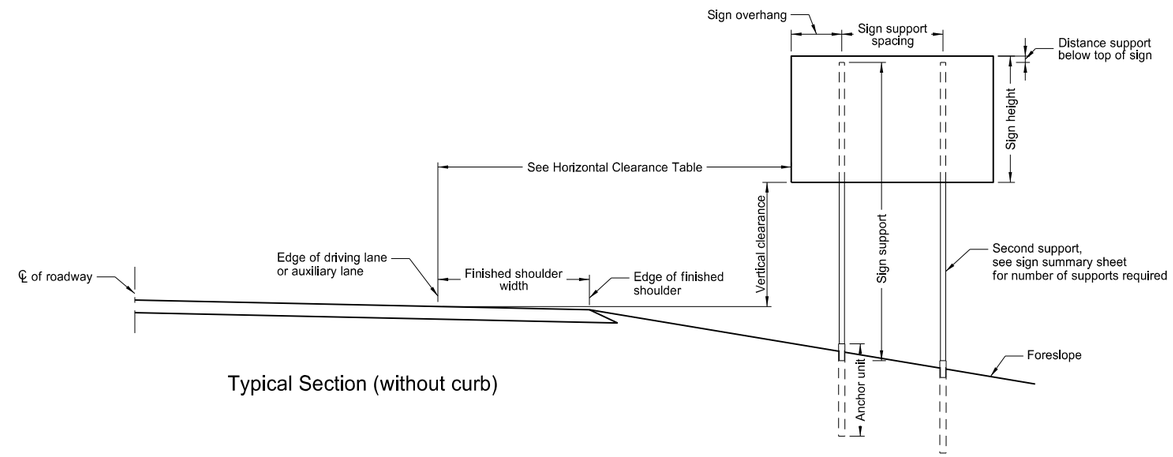

Typical Section (without curb)

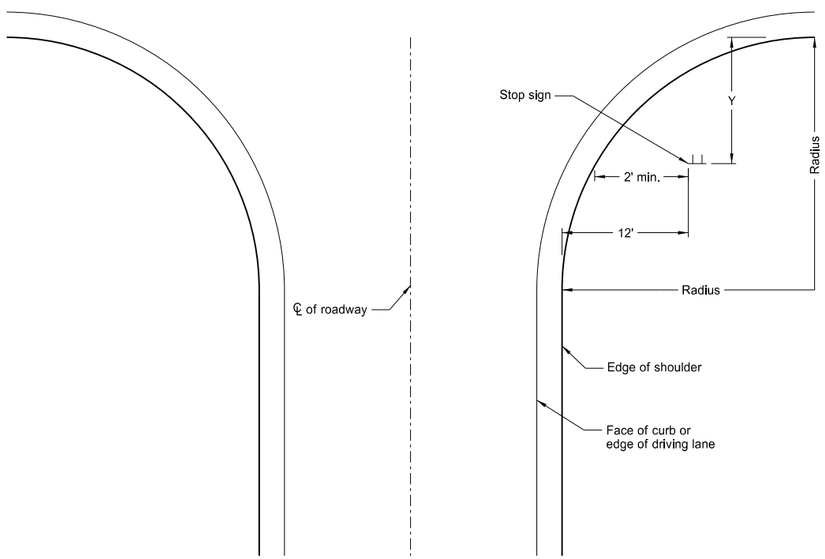

Stop Sign Location
Wide Throat Intersection

This layout is to be used for the placement of "Stop" signs.

Radius ft.	Y-max. ft.	Y-min. ft.
40	50	15
45	50	18
50	50	21
55	50	25
60	50	28
65	50	32
70	50	35
75	50	39
80	50	43

Horizontal Clearance Table	
Shoulder Width ft	Offset ft
0 to 2	16
>2 to 4	18
>4 to 6	20
>6 to 8	22
>8 to 10	24

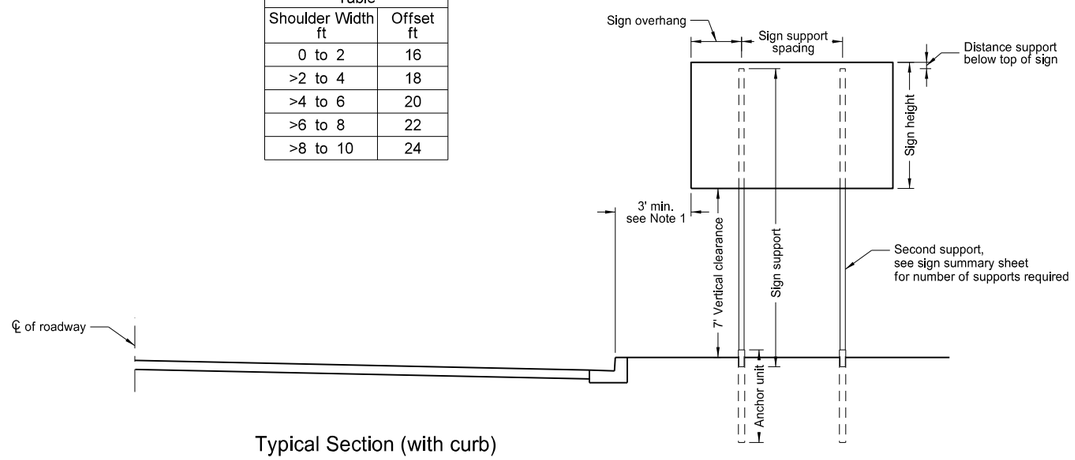

Typical Section (with curb)

Residential or Business District

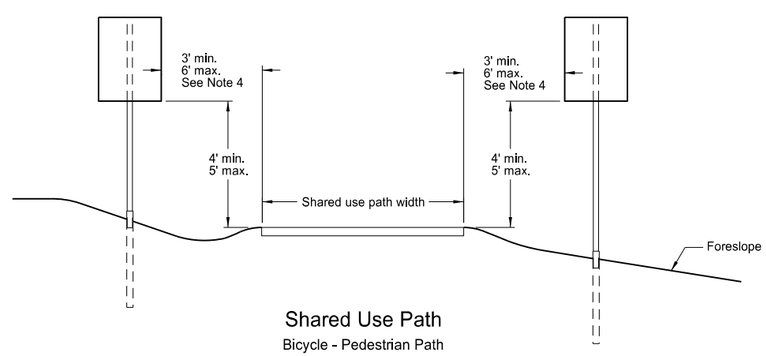

Shared Use Path

Bicycle - Pedestrian Path

NORTH DAKOTA DEPARTMENT OF TRANSPORTATION	
10-3-13	
REVISIONS	
DATE	CHANGE
7-8-14	Revised note 2, added note 4.

This document was originally issued and sealed by Roger Weigel Registration Number PE- 2930, on 7/8/14 and the original document is stored at the North Dakota Department of Transportation

Mounting Details Perforated Tube

D-754-24

Number of Posts	Telescoping Perforated Tube						
	Post Size In.	Wall Thick-ness Gauge	Sleeve Size In.	Wall Thick-ness Gauge	Slip Base	Anchor Size Without Slip Base In.	Anchor Wall Thick-ness Gauge
1	2	12			No	2¼	12
1	2¼	12			No	2½	12
1	2½	12			(B)	3(C)	7
1	2½	10			Yes		7
1	2¼	12	2½(D)	12	Yes		7
1	2½	12	2¼	12	Yes		7
2	2½	10			Yes		7
2	2¼	12	2½(D)	12	Yes		7
2	2½	12	2¼	12	Yes		7
3 & 4	2½	12			Yes		7
3 & 4	2½	10			Yes		7
3 & 4	2½	12	2¼	12	Yes		7
3 & 4	2¼	12	2½(D)	12	Yes		7
3 & 4	2½	10	2 3/16	10	Yes		7

(B) - The 2½", 12 gauge posts do not need breakaway bases when placed in standard soils, but require a shim as specified by the manufacturer. The breakaway base is required when the support is placed in weak soils. The Engineer shall determine if the soils are weak. Weak soils are classified as boggy, wet, or loose soil areas.
(C) - 3" anchor unit
(D) - 2½" x 12 ga. x 18" minimum length external sleeve required.

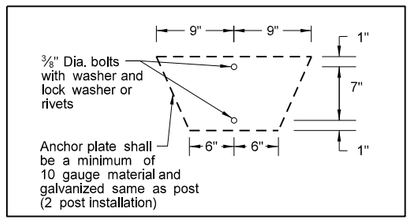

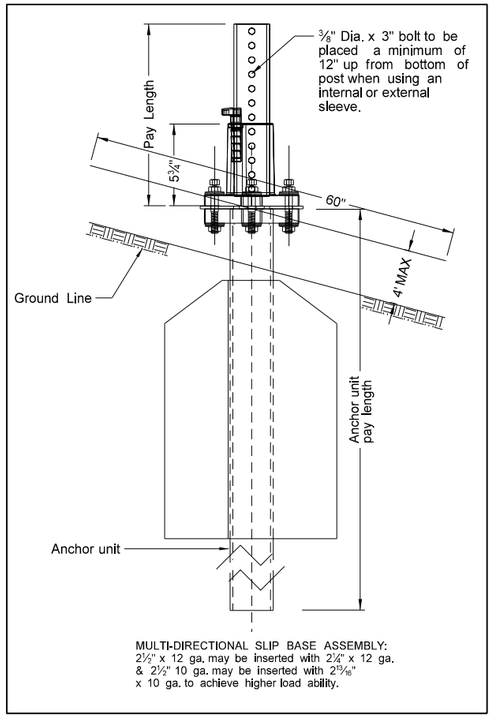

MULTI-DIRECTIONAL SLIP BASE ASSEMBLY:
2½" x 12 ga. may be inserted with 2¼" x 12 ga. & 2½" 10 ga. may be inserted with 2 15/16" x 10 ga. to achieve higher load ability.

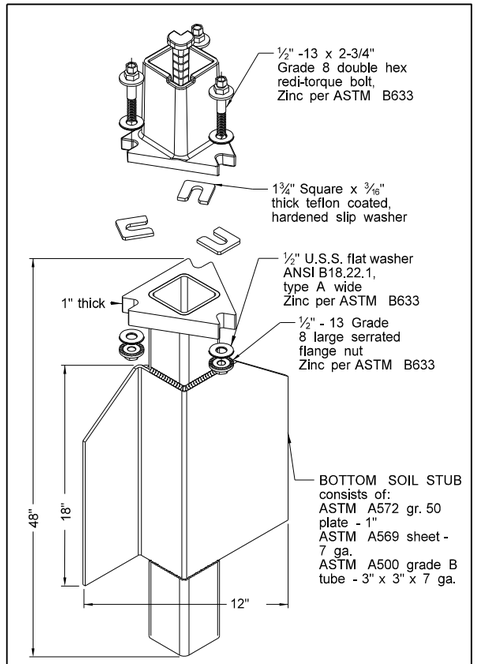

SLIP BASE FOR 2½" POST

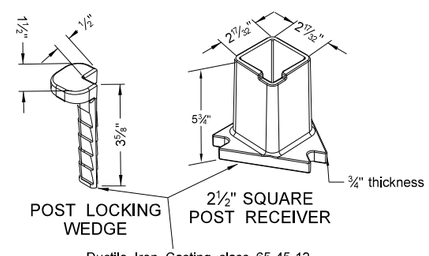

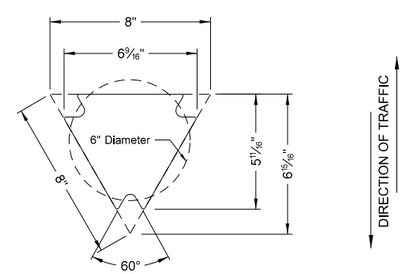

SLIP BASE DETAIL

Properties of Telescoping Perforated Tubes						
Tube Size In.	Wall Thickness in.	U.S. Standard Gauge	Weight Per Foot Lbs.	Moment of Inertia In.⁴	Cross Sect. Area In.²	Section Modulud In.³
1½ x 1½	0.105	12	1.702	0.129	0.380	0.172
2 x 2	0.105	12	2.416	0.372	0.590	0.372
2¼ x 2¼	0.105	12	2.773	0.561	0.695	0.499
2⅜ x 2⅜	0.135	10	3.432	0.605	0.841	0.590
2½ x 2½	0.105	12	3.141	0.804	0.803	0.643
2½ x 2½	0.135	10	4.006	0.979	1.010	0.783

The 2 3/16" size 10 gauge is shown as 2.19" size on the plans; The 2½" size is shown as 2.51" size on the plans.

NOTE:

1. 4" Vertical clearance of anchor or breakaway base. The 4" x 60" measurement shall be made above and below post location and also back and ahead of post.
2. Anchor material shall be 7 guage H.R.P.O. Commmercial quality ASTM A569 and 3" x 3" x 7" guage ASTM A500 grade B. Anchor shall have a yield strength 43.9 KSI and tensile strength of 59.3 KSI. Anchor shall be hot dipped galvanized per ASTM A123/153. All tolerances on anchor unit and slip base bottom assembly are +/- 0.005" unless ortherwise noted.
3. When used in concrete sidewalk, anchor shall be the same concept without the wings
4. Four post signs shall have over 8' between the first and fourth posts.
5. Installation procedures as per manufacturers recommendation.
6. Concrete fasteners for surface mount breakaway base shall be a minimum ½" diameter x 4" grade 8.

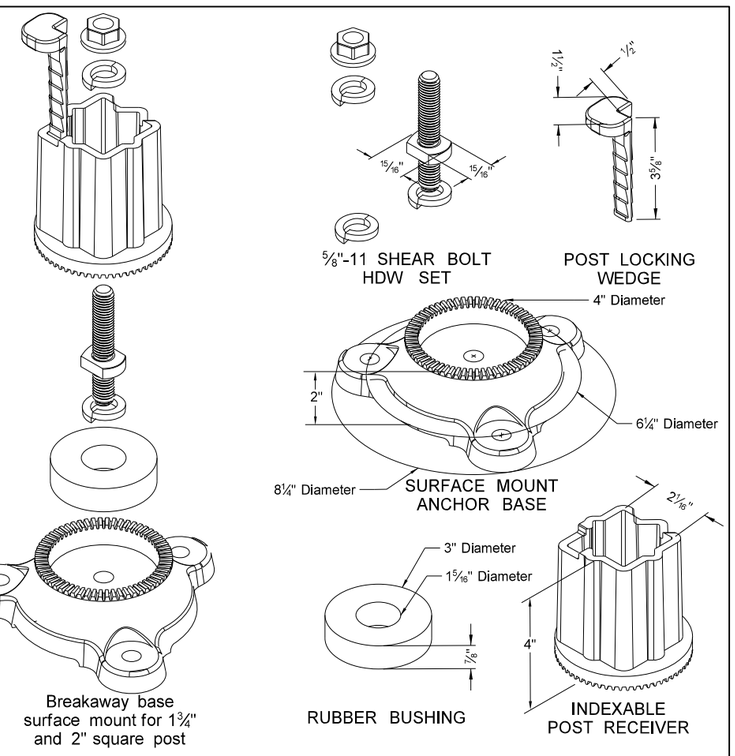

SURFACE MOUNT ANCHOR BASE

SHOULDER BOLT

Shimming agent to reduce tolerance between 3" anchor unit and 2½" post.
(standard ⅜" diameter grade 8 bolt may be used with proper shim)

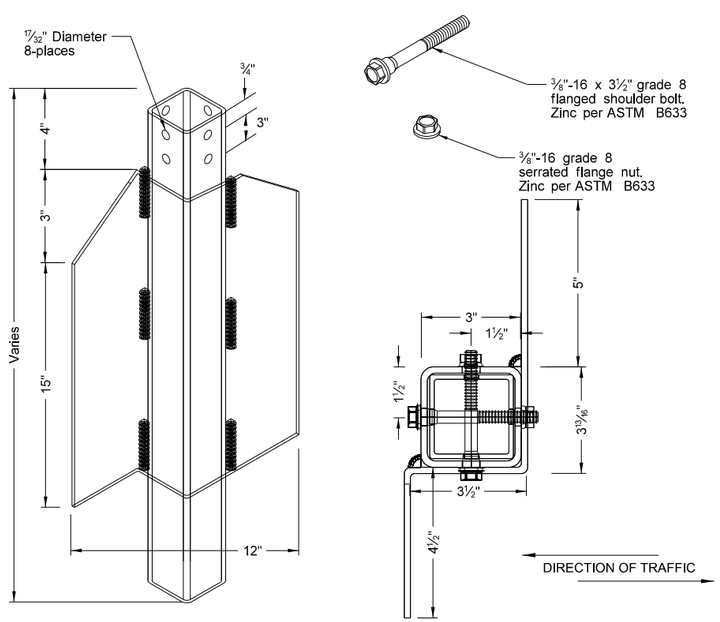

3" ANCHOR UNIT

NORTH DAKOTA DEPARTMENT OF TRANSPORTATION	
8-6-09	
REVISIONS	
DATE	CHANGE

This document was originally issued and sealed by Roger Weigel, Registration Number PE- 2930, on 08/06/09 and the original document is stored at the North Dakota Department of Transportation

D-754-24A

Breakaway Coupler System for Perforated Tubes

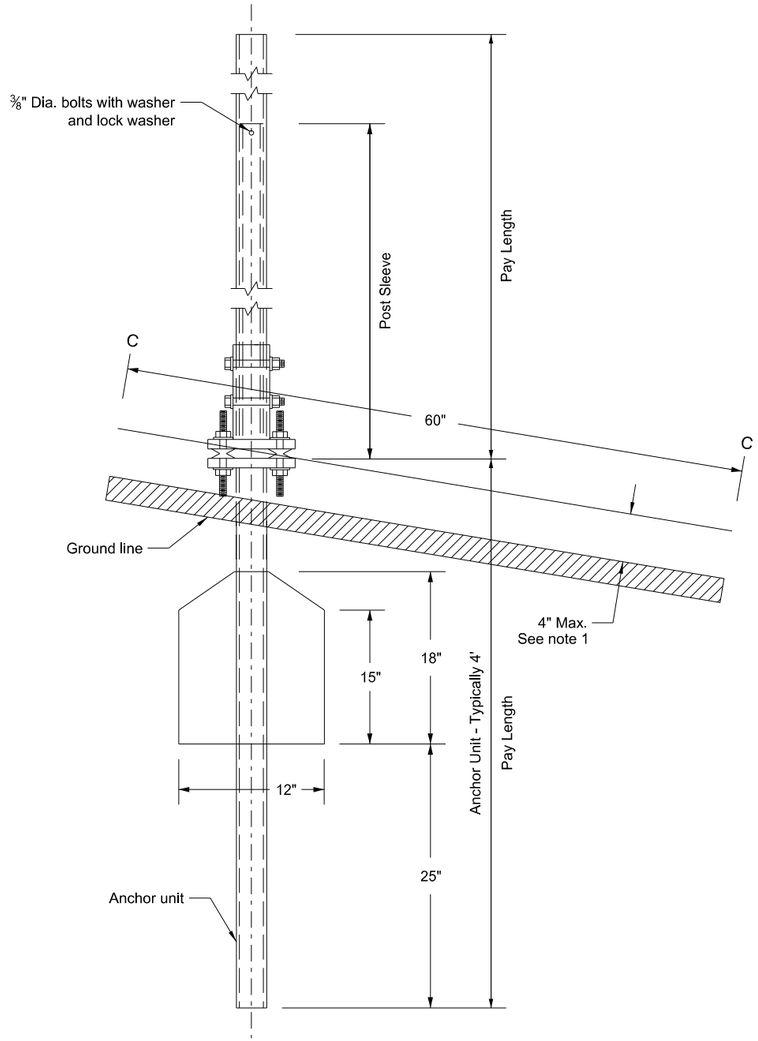

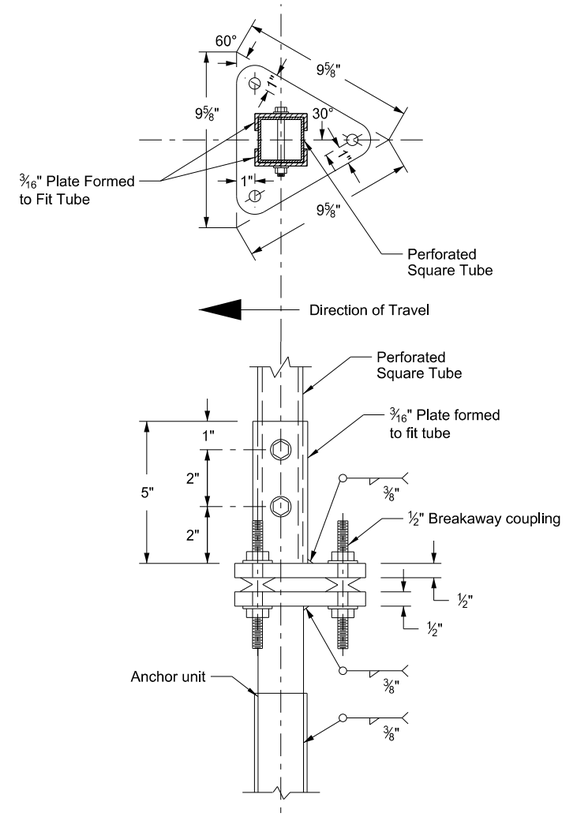

Base Plate with Breakaway Coupler

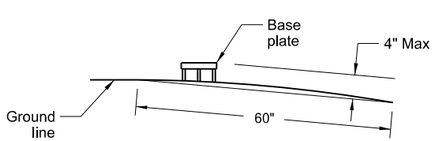

Section C-C

Max. protection of the stub post is 4" above a 60" chord aligned radially to the center line of the highway and connecting any point, within the length of the chord, on the ground surface on one side of the support to a point in the ground surface on the other side.

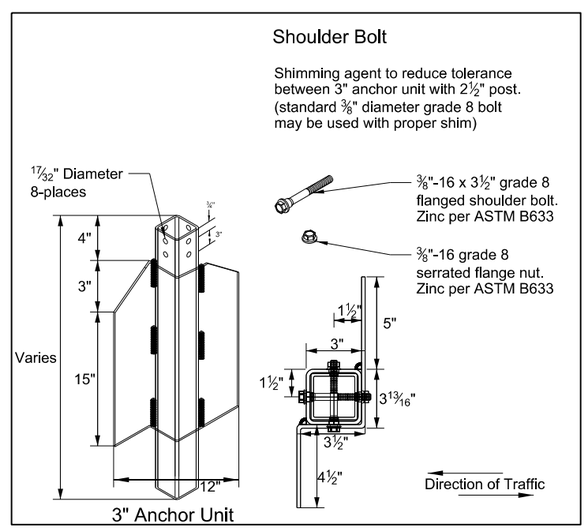

3" Anchor Unit

Notes:

1. 4" Vertical clearance of anchor or breakaway base. The 4" x 60" measurement shall be made above and below post location and also back and ahead of post.
2. Anchor unit shall be the same size as the post and shall have the same specification as the post.
3. Four post signs shall have over 8' between the first and fourth post.
4. In lieu of the breakaway base system on standard D-754-24 the breakaway coupling system may be used. The breakaway coupler system shall be manufactured from material meeting the requirements of ASTM A325 fasteners with the special requirements as specified by DENT BREAKAWAY IND., INC. which meets the test requirements of NCHRP Report 350.

Number of Posts	Telescoping Perforated Tube						
	Post Size In.	Wall Thick-ness Gauge	Sleeve Size In.	Wall Thick-ness Gauge	Slip Base	Anchor Size Without Slip Base In.	Anchor Wall Thickness Guage
1	2	12			No	2¼	12
1	2¼	12			No	2½	12
1	2½	12			(B)	3(C)	7
1	2½	10			Yes		7
1	2¼	12	2	12	Yes		7
1	2½	12	2¼	12	Yes		7
2	2½	10			Yes		7
2	2¼	12	2	12	Yes		7
2	2½	12	2¼	12	Yes		7
3 & 4	2½	12			Yes		7
3 & 4	2½	10			Yes		7
3 & 4	2½	12	2¼	12	Yes		7
3 & 4	2¼	12	2	12	Yes		7
3 & 4	2½	10	2 3/16	10	Yes		7

(B) - The 2½" 12 gauge posts do not need breakaway bases when placed in standard soils. The breakaway base is required when the support is placed in weak soils. The Engineer shall determine if the soils are weak. Weak soils are classified as boggy, wet, or loose soil areas.

(C) - 3" anchor unit

NORTH DAKOTA DEPARTMENT OF TRANSPORTATION	
10-3-2013	
REVISIONS	
DATE	CHANGE

This document was originally issued and sealed by Roger Weigel Registration Number PE- 2930, on 10/3/13 and the original document is stored at the North Dakota Department of Transportation

Mounting Details Perforated Tube

D-754-25

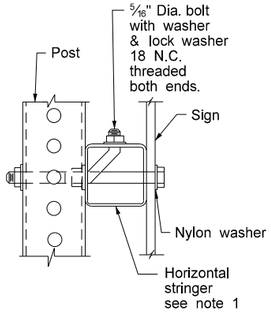

Side View

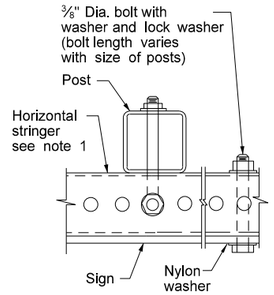

Top View

STRINGER MOUNTING
(WITH STRINGER IN FRONT OF POST)

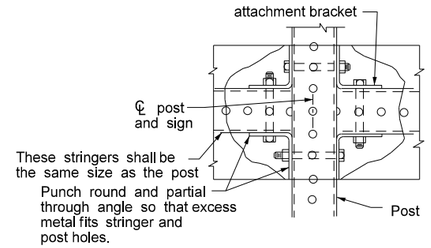

STREET NAME SIGNS
AND ONE WAY SIGNS
SINGLE POST ASSEMBLY
ONE STRINGER OR
BACK TO BACK MOUNTING

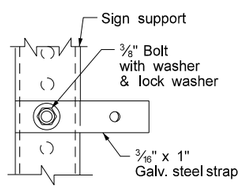

Side View

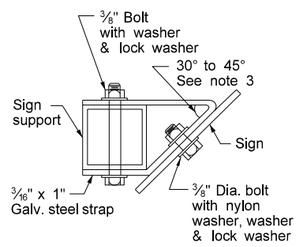

Top View

STRAP DETAIL

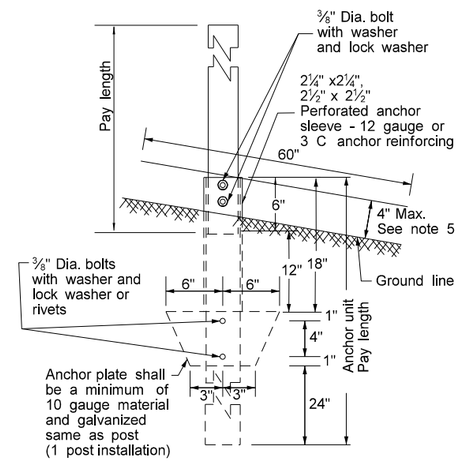

ANCHOR UNIT AND
POST ASSEMBLY

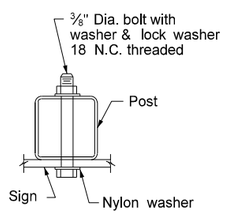

BOLT MOUNTING

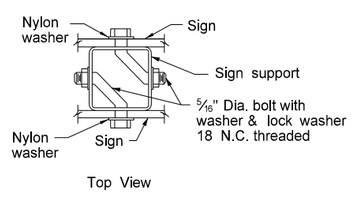

Top View

BACK TO BACK
MOUNTING

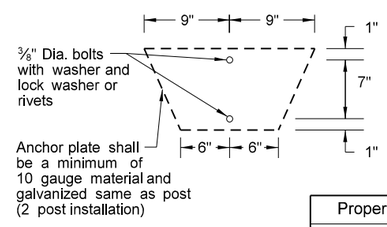

Note:

1. Horizontal stringers - In lieu of perforated tubes, the contractor may substitute z bar stringers. The z bar stringers shall be 1¾" x 3/16" thick, 1.08 lbs./ft aluminum or 3.16 lbs./ft steel.
2. Metal washers used on sign face shall have a minimum outside diameter of 15/16" ± 1/16" and 10 gauge thickness.
3. No Parking Signs: All no parking signs with directional arrows shall be placed at a 30 to 45 degree angle with the line of traffic flow. No parking signs required at the above angles may have the support turned to the correct angle. If the no parking sign is placed with another sign that has to be placed at a 90 degree angle with the line of traffic flow, the detailed angle strap should be used to mount the no parking sign. Flat washers and lock washers shall be used with all nylon washers.
4. In lieu of using the bent bolt to attach the post to the stringer, the contractor may choose to punch the sign backing and place the bolt through the sign, the stringer and the post.
5. 4" vertical clearance of anchor or breakaway base. The 4" x 60" measurement shall be made above and below post location and also back and ahead of post.

Number of Posts	Telescoping Perforated Tube						
	Post Size In.	Wall Thick-ness Gauge	Sleeve Size In.	Wall Thick-ness Gauge	Slip Base	Anchor Size Without Slip Base In.	Anchor Wall Thick-ness Gauge
1	2	12			No	2¼	12
1	2¼	12			No	2½	12
1	2½	12			(B)	3(C)	7
1	2½	10			Yes		7
1	2¼	12	2½(D)	12	Yes		7
1	2½	12	2¼	12	Yes		7
2	2½	10			Yes		7
2	2¼	12	2½(D)	12	Yes		7
2	2½	12	2¼	12	Yes		7
3 & 4	2½	12			Yes		7
3 & 4	2½	10			Yes		7
3 & 4	2½	12	2¼	12	Yes		7
3 & 4	2¼	12	2½(D)	12	Yes		7
3 & 4	2½	10	2 3/16	10	Yes		7

(B) - The 2½", 12 gauge posts do not need breakaway bases when placed in standard soils, but require a shim as specified by the manufacturer. The breakaway base is required when the support is placed in weak soils. The Engineer shall determine if the soils are weak. Weak soils are classified as boggy, wet, or loose soil areas.
(C) - 3" anchor unit
(D) - 2½" x 12 ga. x 18" minimum length external sleeve required.

Properties of Telescoping Perforated Tubes						
Tube Size In.	Wall Thickness In.	U.S. Standard Gauge	Weight Per Foot Lbs.	Moment of Inertia $In.^4$	Cross Sect. area $In.^2$	Section Modulus $In.^3$
1½ x 1½	0.105	12	1.702	0.129	0.380	0.172
2 x 2	0.105	12	2.416	0.372	0.590	0.372
2¼ x 2¼	0.105	12	2.773	0.561	0.695	0.499
2 3/16 x 2 3/16	0.135	10	3.432	0.605	0.841	0.590
2½ x 2½	0.105	12	3.141	0.804	0.803	0.643
2½ x 2½	0.135	10	4.006	0.979	1.010	0.783

The 2 3/16" size 10 gauge is shown as 2.19" size on the plans.
The 2½" size is shown as 2.51" size on the plans.

NORTH DAKOTA
DEPARTMENT OF TRANSPORTATION

8-6-09

REVISIONS

DATE	CHANGE
7-8-14	Revised Note 3

This document was originally issued and sealed by Roger Weigel, Registration Number PE- 2930 , on 7/8/14 and the original document is stored at the North Dakota Department of Transportation

SIGN PUNCHING, STRINGER AND SUPPORT LOCATION DETAILS REGULATORY, WARNING AND GUIDE SIGNS

D-754-32

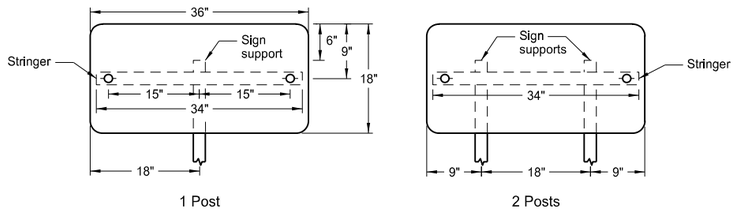

Assembly No. 31

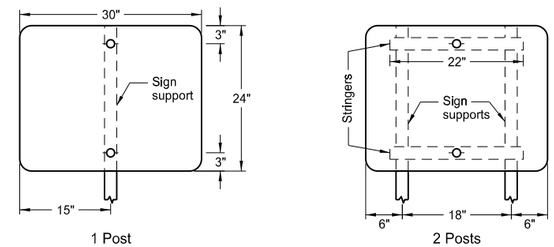

Assembly No. 32

Notes:

1. See Standard D-754-25 for mounting details.
2. The minimum sign backing material thickness shall be 0.100 inch.
3. Perforated square tube stringer shall be 1½" x 1½".
4. All holes shall be punched round for ⅜" bolt.

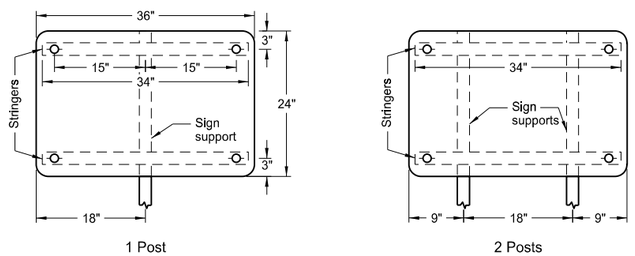

Assembly No. 33

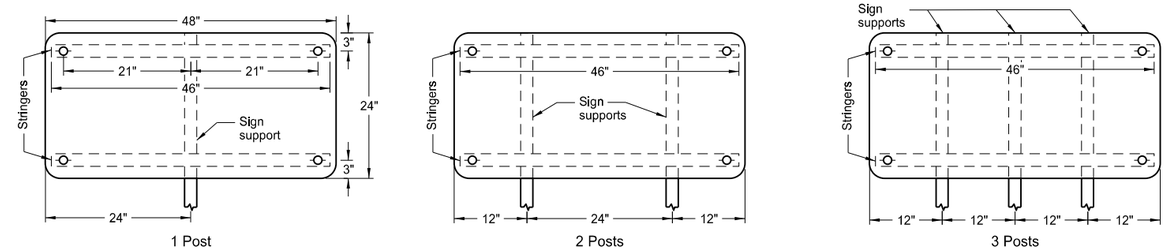

Assembly No. 34

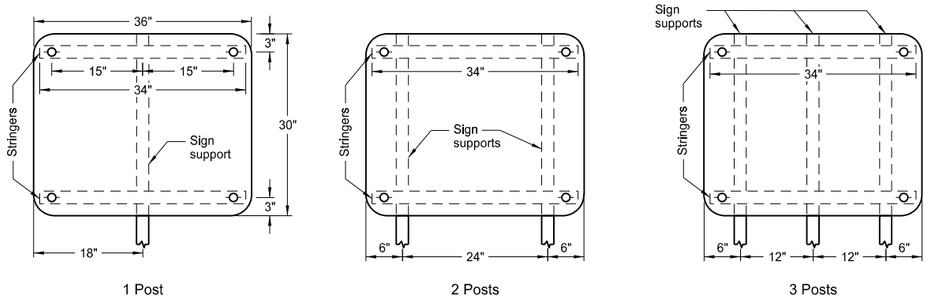

Assembly No. 35

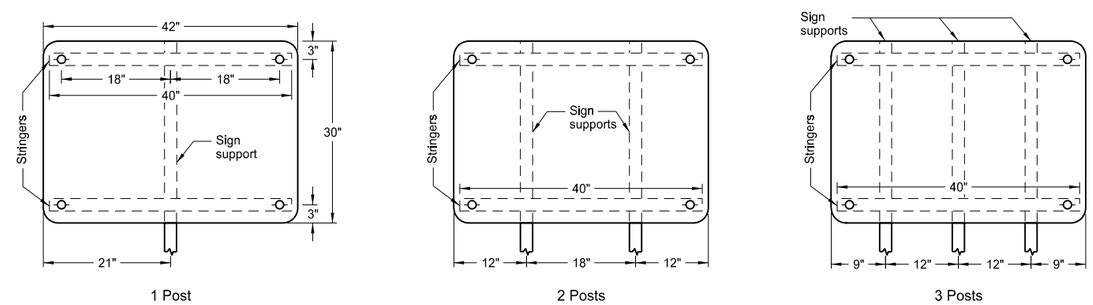

Assembly No. 36

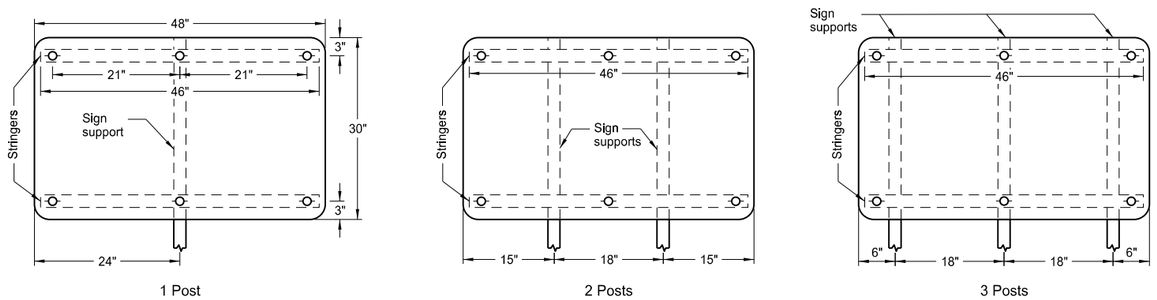

Assembly No. 37

NORTH DAKOTA DEPARTMENT OF TRANSPORTATION	
12-1-10	
REVISIONS	
DATE	CHANGE

This document was originally issued and sealed by Roger Weigel, Registration Number PE- 2930, on 12-1-10 and the original document is stored at the North Dakota Department of Transportation